SWIFT

WEIGHING INDICATOR AND HIGH SPEED TRANSMITTER

OPERATION AND CONFIGURATION MANUAL

Revision: Nov 2017 (English)
For software versions: 1.006X

SWIFT

CALIBRATION RECORD

Record the calibration settings in the following table.

Serial Number:	
Model:	
Operating Voltage:	**12-24 VDC**
Purchase Date:	
Installation Date:	
Calibration Coefficients: ZERO: SPAN:	
Access Code (ID):	**2802**
WARNING Keep this number in a safe place. This will be the only one that will let you access the protected parameters (scale definition, calibration and others)	

SAFETY PRECAUTIONS

WARNING-SHOCK HAZARD
For proper earthing, the safety earth wire (green or green/yellow) must be connected to the general earth wire.

WARNING-SHOCK HAZARD
Due to the risk of electrical shock, this instrument must be installed only by qualified personnel.

WARNING-SHOCK HAZARD
Signals connected to the communications modules (RS-232 and RS-485) should be provided by a power supply with SELV (very low security levels)

CAUTION
Calibration and configuration must be performed only by qualified personnel.

CAUTION
The integrated circuits in the SWIFT are sensitive to electrostatic discharge (ESD). Be sure to follow proper procedures for transporting, storing and handling ESD-sensitive components.

CAUTION
Reference should be made to the enclosure in which the SWIFT is going to be mounted: Degree of mechanical protection against impact according to EN62262: indoor use IK05, IK08 for outdoor use.

INDEX

1 Introduction

1.1 Indicator Characteristics

1.1.1 Load Cell connection

Full scale input signal	±3,9 mV/V
Input impedance	200 MΩ (typical)
Internal resolution	Converter AD 24 bits, 16.700.000 counts (± 8.350.000)
Measurement rate	2.400 measurements per second
Linearity error	≤ 0,01 % of measurement level
Zero stability	150 nV/ºC max.
Span stability	3,5 ppm/ºC max.
Excitation voltage	5,0 ± 0,5 VDC
Transducer minimum resistance	43Ω (8 cells of 350Ω, 16 cells of 700Ω)
Transducer maximum resistance	1.000 kΩ
Wire length	400 m/mm^2 max. (6 wires) 30 m/mm^2 max. (4 wires)

1.1.2 Operator Interface

Display	6 digit LED 10 mm
Keyboard	Keyboard with 5 keys

1.1.3 Serial Communications

COM1:	Bi-directional RS-232 (Dist. up to 15m) Own protocols:, Modbus (RTU and ASCII)
COM2:	Half-duplex RS-485, (Dist. up to 1.200m and 32 devices) Own protocols:, Modbus (RTU and ASCII)
Transmission rates	115200, 57600, 38400, 19200, 9600 and 4800 bauds
Number of bits and parity	8 bits no parity, 8 bits “even” parity an 8 bits “odd” parity

1.1.4 Input/Output Options

3 digital inputs	Opto-isolated with status LED V_{ILOW} ≤ 0,8V; V_{IHIGH} ≥ 4V; V_{IMAX} = 30V
3 digital outputs	Relay outputs with status LED: Normally Open (N.O) Umax: 30V/AC 30V/DC; Imax: 100mA
Analog output (Only SWIFT A version)	Galvanic insulation output, 16-bits D/A Voltage output: 0 –10.5V (nom); load > 10kΩ Current output: 0 – 21mA; loop resistance<500 Ω

1.1.5 Power

Power supply:	10V to 28V DC
Consumption:	4W (max.) – **Profibus/Profinet version**: 6W (max.)

1.1.6 Environmental and Mechanical

Operating temperature	-20ºC to 50ºC
Storage temperature	-25ºC to 60ºC
Size	**SWIFT RAIL/COM RS/RS+ANALOG**: 146 x 80 x 29 mm **SWIFT RAIL/COM PROFIBUS/PROFINET**: 146 x 80 x 33 mm **SWIFT PANEL**: 96x48x140 mm Panel Cut recommended: 92x45,5 mm
Transp. weight	**SWIFT RAIL/COM RS/RS+ANALOG**: 0,3 kg **SWIFT RAIL/COM PROFIBUS/PROFINET**: 0,35 kg **SWIFT PANEL**: 0,25 kg
Mounting	**SWIFT RAIL/COM**: DIN-Rail **SWIFT PANEL**: PANEL mounting
Ingress protection ratio	IP40 IP65 using IP65 Hood cover for SWIFT PANEL

1.2 Key board

The keyboard is located on the front of the instrument and has 5 keys. These keys have simultaneous detection of pressing in more than one key.

Keys	Normal status	Setup mode
EXIT	Exit any operation	Up a level / exit configuration mode
▸0◂	Acquire a Zero	Move to the left (Cursor) / change option
→T	Tare the scale	Move to the right (Cursor) / change option
F▲	Setpoints programming	Increase the digit (Cursor)
⊙↵	Print	Selection / Down a level / Confirm

1.3 Display and Luminous Information

The indicator consists of a main display, four luminous weight indicators and 6 digital input/output indicator status lights. The arrangement can be seen in figure 1.3.1 and 1.3.2.

1.3.1 SWIFT RAIL

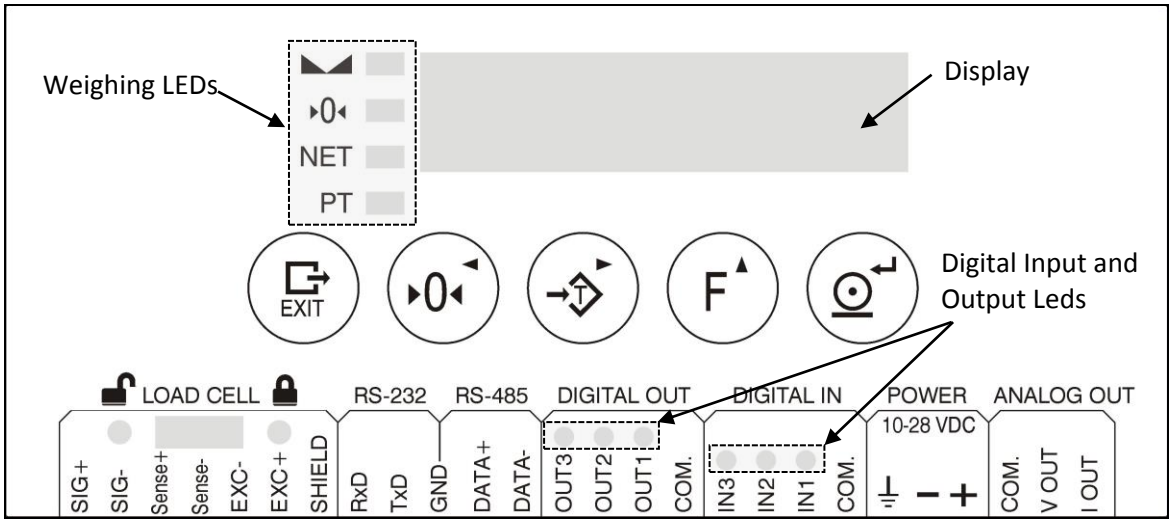

Figure 1.3.1.1 Display and luminous information SWIFT RAIL

1.3.1.1 Weighing function LEDs

Indicator	Meaning
◣◢	Scale is in standstill mode
▸0◂	Zero
NET	Tare
PT	Prefixed tare

1.3.2 SWIFT PANEL

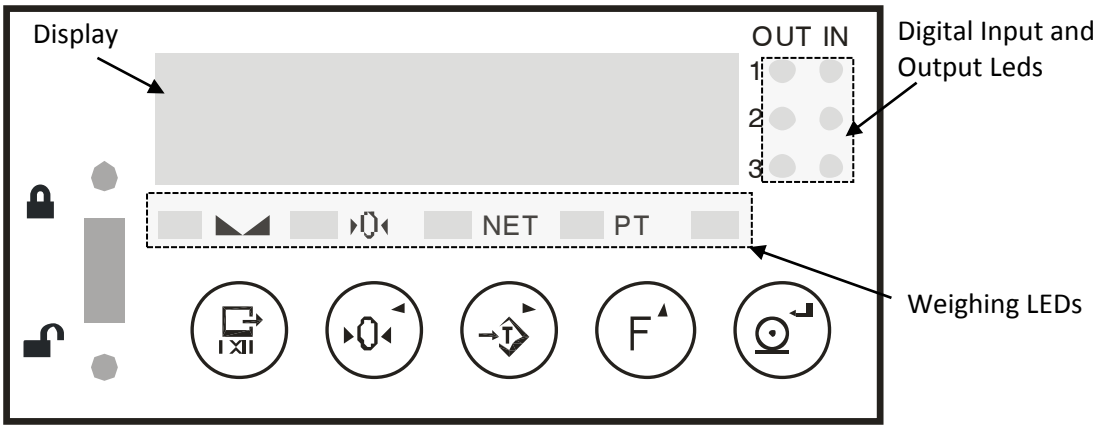

Figure 1.3.2.1 Display and luminous information SWIFT PANEL

1.3.2.1 Weighing function LEDs

Indicator	Meaning
	Scale is in standstill mode
0	Zero
NET	Tare
PT	Prefixed tare

1.3.3 SWIFT COM

SWIFT COM is only available in DIN rail mounting.

There are two leds (three leds for field bus version) to inform about indicator's status.

Without any keyboard or display, the only way to configure SWIFT COM is by SWIFT PC software.

SWIFT COM has 2 LEDs:

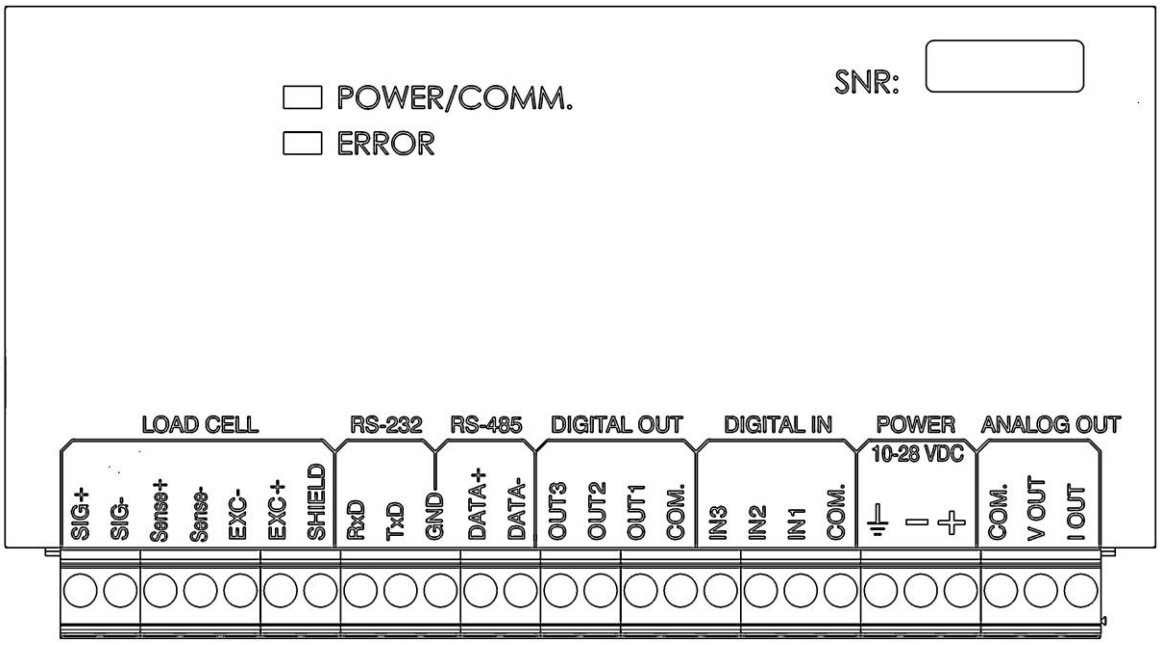

Figure 1.3.3.1 LED information status for SWIFT COM

SWIFT COM field bus version has 3 LEDs:

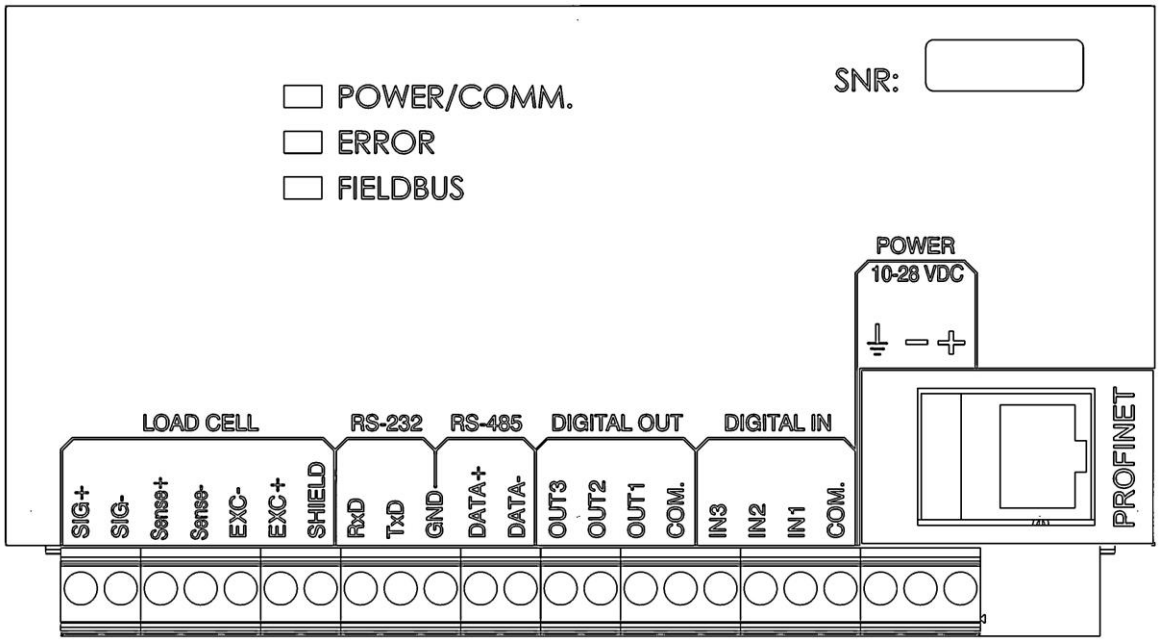

Figure 1.3.3.2 LED information status for SWIFT COM field bus version

1.3.3.1 LED status information

LED POWER/COMM.: LED On indicates that the device is powered.

- **One short flash**: The device has received one message through a serial port.
- **Slow flashing**: Power failure (LowBat).

LED ERROR:

- **Off**: When there is no error.
- **On**: When the device has any of the following errors:
  - Reference error (Err.rEF). Sense signal on the load cell is too low.
  - ADC Error: Signal on the ADC is out of range.
  - Overload: Input signal is above the maximum range.
  - Underload: Input signal is below the minimum range.
- **Flashing**:
  - ADC damaged. Hardware failure.
  - NVM damaged. Hardware failure.

LED FIELDBUS:

- **Off**: Field bus interface has been manually deactivated.
- **On**: Field bus interface active and conected to the master.
- **Flashing**: Field bus interface active but not communicating with the master.

1.3.3.2 Special indications

There are different combinations of LED flashings to show different statuses:

- Fast flashing of POWER/COMM. and ERROR, (FIELDBUS LED Off if any): The devise is in a special communication mode (PC_CtrL mode) to communicate with the PC using SWIFT PC software to calibrate/configurate/update. While working in this mode, input/output functions and applications are not working.
- Slow flashing of POWER/COMM. and ERROR (FIELDBUS LED Off if any): Indicates that the device is in rEnotE mode to communicate with SWIFT PC software to configure or calibrate the indicator.

- Alternate flashing of POWER/COMM. and ERROR LEDs (FIELDBUS LED Off if any): Means that the device is in Bootloader mode, ready for a software update using SWIFT PC. To exit this mode is needed to wait until the software is updated. Depending on the flashing sequence it shows witch channel is waiting for communication:
    - If ERROR LED stays more time On, it means that the communication is through RS-485 serial port.
    - If POWER/COMM. LED stays more time On, it means that the communication is through RS-232 serial port.
- Slow flashing of POWER/COMM. , ERROR LED Off (FIELDBUS LED Off if any): Means that power is too low (Low_Bat) This indication prevails over the other.

1.4 Label with characteristics and metrological identification

It is located on the rear side of the indicator, as shown in figure 1.4.1. It is a safety label which contains the characteristics of the device, and metrological values and marks.

Figure 1.4.1 Label with characteristics and metrological identification layout

1.5 Maintenance

1.5.1 Cleaning

a. Unplug the device from supply.
b. Clean the indicator with a clean and dry cloth.

CAUTION
Never use alcohol or solvents to clean the indicator. These chemical products could damage it.
Make sure that water does not enter the indicator. It could damage electronic components.

1.6 Error Messages

Display	Condition	Solution
Err 0	Scale is not empty	Remove the weight
Err 1	EEPROM failure	Contact your technical service
Err 2	Incorrect entered value	Enter a value inside the range
Err 3	The option that is trying to access is not available with the current configuration	Check that the selected working mode and the configuration of the device allow access to this option
Err 4	The parameter that is trying to modify is blocked by an application	Check if a digital input or a digital output is been used by an application (APPL 1)
Err 5	Invalid target parameter for dossing	Check if target weight is smaller than the inflight value or above MAX parameter (while charging) or too low (while discharging)
Err 6	Dosed weight out of margins	Check that the dosed weight is out of the programmed margins
Err 7	Lack of product	Add product and check feeder
ErrSCL	Scale error	Check that weight is within scale margins. Possibility of Err rEF, AdC. Err
Err.rEF	Sense signal of the load cell is too low	Check load cell's connections. For 4 wire load cell, check connection of SENSE bridge (see 7.1)
Err 90	Bus module failure	Contact your technical service
Err 99	Reset caused by software supervisor	Contact your technical service if problem persists
AdC.Err	ADC error	Check connector and load cell cable
AdC.FAL	ADC failure	Contact your technical service
AoUt.FA	Analog output failure	Contact your technical service
------	Weight exceeds the maximum capacity Enter signal exceeds the maximum range	Remove weight Check installation
_____	Enter signal under the minimum range	Check installation
Err.Prn	Weight on the scale is below the value set in the PRINT MINIMUM option	Place a weight above the minimum value (see 3.3.8)
Err.CAP	Not accomplished: $\frac{MAX}{DIV} \leq 100000$	Check that MAX value is correct Change DIV to accomplish the relation
Err.d1	Not accomplished: $\frac{MAX}{DIV} \leq 100000$	Check that DIV value is correct Change MAX to accomplish the relation
Lo_bAt	Power failure	Check power supply
CAL.toP	The maximum number of calibrations (9.999) has been reached	Contact your technical service
no Con	Field bus activated but not communicating with any other device	Check configuration of the device to communicate or deactivate the bus
	Unplugged	Plug it in
	Indicator failure	Contact your technical service

2 Operation

2.1 Turning the indicator on

To turn the indicator on, connect it to the power supply. The switch on process will first display a test countdown sequence, with the weighing LEDs blinking at each step. The sequence ends with the software version (S), the equipment serial number (Snr), and finally the number of performed calibrations (nC).

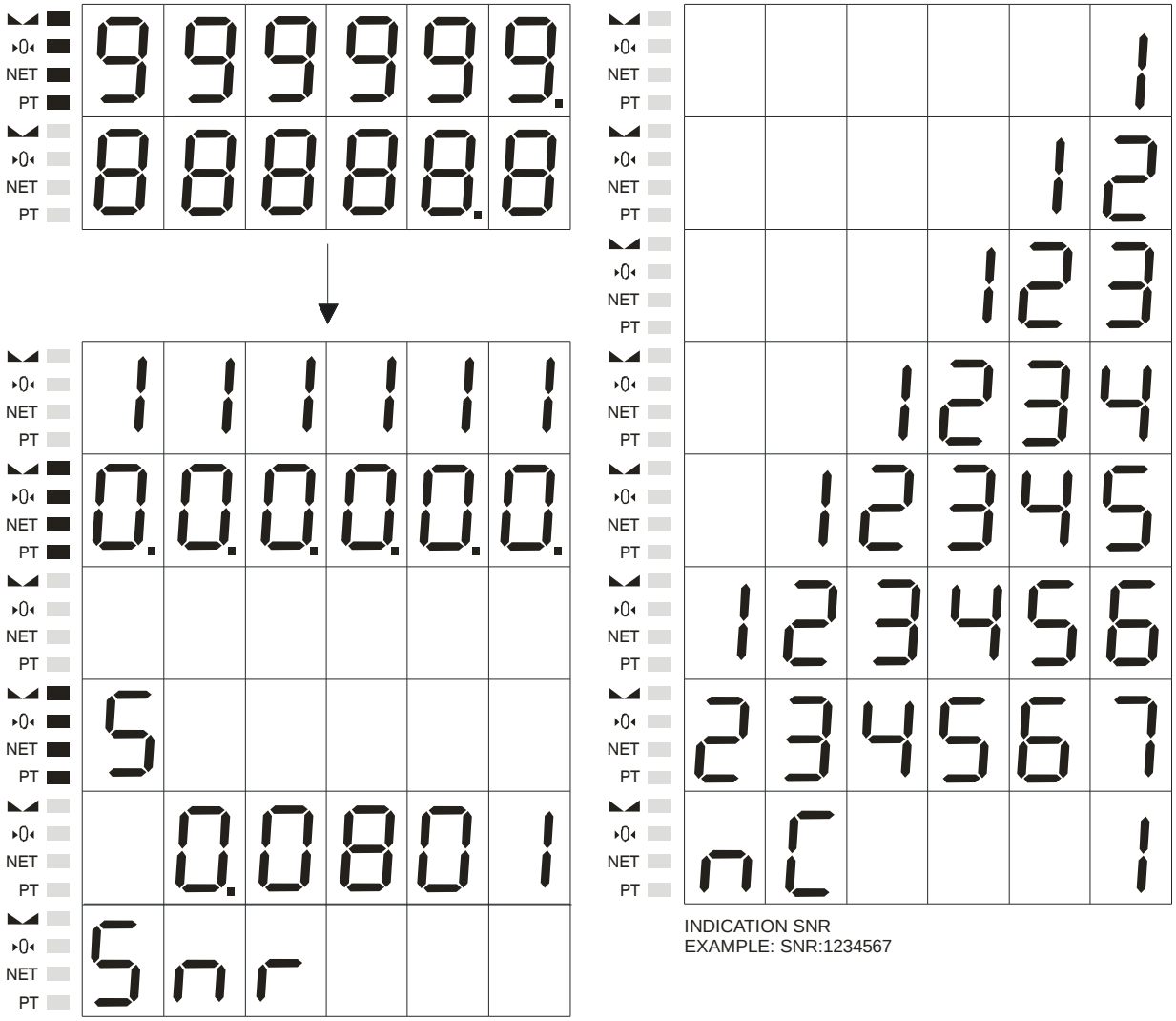

Figure 2.1.1 Switch on sequence

It is recommended that the instrument is allowed to warm up and stabilize for a period of 30 minutes before using it, especially before a calibration. In order to avoid warm up time and potential condensation in case of significant changes in the outside temperature, the device can be left permanently connected.

2.2 Entering Values

To use some of the equipment functions, it is necessary to enter numerical values. Use the arrow keys to enter these values. Use right and left arrow keys to select the digit to be modified, and the up arrow keys to increase its value.

2.3 Normal Weighing

The measured weight is displayed.

2.4 Zero

The indicator has a manual zero-ing function. When you press the Zero key the indicator stores the current weight value as the zero of the system.
This key acts according to how the 0-top has been defined (see 3.2.5).
Operation:

It is possible to lock the zeroing key (see 3.3.7).

2.5 Tare

2.5.1 Activate tare

Press the Tare key. The current value will be stored as tare. The NET led lights up.
Operation:

It is possible to lock the tare key (see 3.3.7).

2.5.2 Clearing a Tare Value

To clear a tare register in normal operation, that is to say when the auto clear tare option is oFF (see 3.3.4), press Exit and then the Tare key.
Operation:

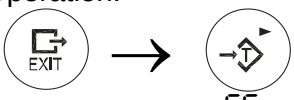

If the tare lock is oFF then the tare is automatically deactivated if the conditions described in 3.3.4 are met.
It is possible to lock the clearing tare key (see 3.3.7).

2.6 Ticket Printout

To print a ticket through RS-232 communication port press the print key. If the weight is under the divisions introduced in PRINT MIN function (see 3.3.8), the display shows "Err.Prn". The RS-232 communication port should be configured as ticket mode, see 3.6.1.
Operation:

Ticket ID:	1
Gross	100.0 kg
Tare	0.0 kg
Net	100.0 kg

Figure 2.6.1 Ticket example

It is possible to lock the print key (see 3.3.7).

2.7 Setpoint

By pressing the F key, the device accedes to the configuration set point menu. In this menu you can configure the weight value at which the selected output operates. To access to this function the device must be configured with the APP: nonE.

Operation:

F

The screen where you should select the number of the set point to configure appears:

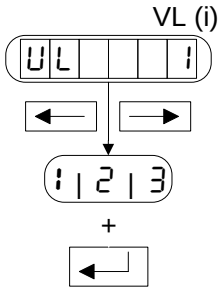

Figure 2.7.1 Setpoint

To select the setpoint use these 0 keys. The enter key allows us to get into the edit mode. Press Enter to accept. Press Exit if you want to exit the menu without making any changes.

If you want to enter a negative set point, the minus sign should be placed in the digit to the left.

The message Err 2 will appear if we set a higher value than the capacity of the scale or an incompatible value due to the scale division.

Exit:

EXIT por tecla

When parameter d_LoC i is on then the message LoC (locked) will be shown and will blink three times, this parameter cannot be modified from this menu.

To lock the setpoint key F, see 3.3.7.

2.8 Display Preset Tare

With the device in the 'weight' mode (the current weight value is displayed), pressing the simultaneously keys EXIT will temporarily display during a few seconds the value of the preset tare. During this time the 'PT' LED will also blink.

2.9 Check-weigher application

2.9.1 General

The check-weigher application allows making a three steps weighing process:

- Delay step
- Weight readings step (weighing gathering)
- Display and printing result step

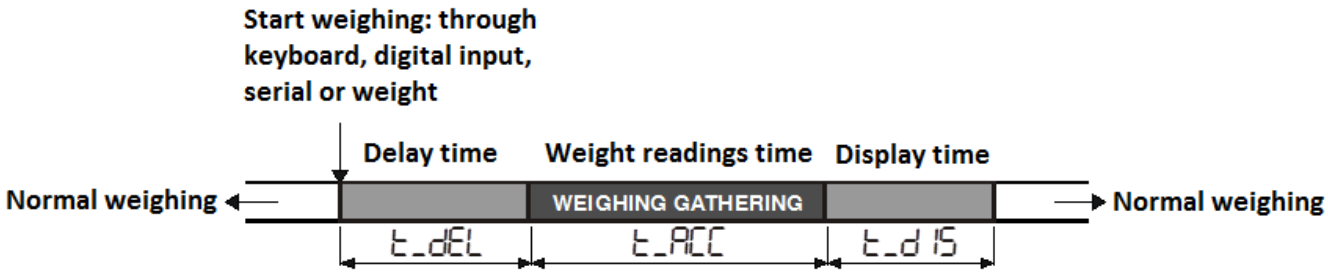

Figure 2.8.1.1 Check-weigher process steps

When starting the application, the first step is a delay one, which is maintained for the programmed time t_dEL, this interval of time allows assuring that the weight is suitable for weighing. Once ended, the second step starts and will last for the programmed time t_ACC, in which the indicator gathers weight readings (that are not displayed), to finally make a weight average of all the weight gathering period, which is printed, sent through a serial port and/or totalized depending on the device configuration. That average is displayed in the third step during the programmed time t_dIS.

If totalization function is activated, the result of every weighing will be added to a totalization value which will be automatically sent to the printer depending on the device configuration. This totalization value and the number of weighings can be consulted through serial ports.

Start weighing methods:

1. By key
2. By external input
3. By serial commands (MODBUS or Simple Protocol)
4. By weight level

Possible actions when finish weighing.

1. Show weight on the display
2. Send to a ticket(*)
3. Accumulate to a totalization value
4. Send through a serial port (to a PC)

(*)Printing ticket: To print a ticket, RS-232 port must to be configured as tYPE:t 1 Depending if totalization is activated or not, the ticket will print a totalization ticket or a Gross/Tare/Net ticket.

The method to start a weighing is determined by parameter StArt (see 3.4.2)
The action when finish the weighing is configured in parameters totAL and PC. See section 3.4 for more information.

2.9.2 Operate by key

To start a weighing by key, the StArt parameter must to be configured as tEY or as tEY. InP.

Pressing F key, weighing starts. Depending on device configuration, when finish weighing, will be able to automatically start the following actions:

- Print a ticket.
- Totalize weighing in a totalization value.
- Send weighing through a serial port.

While totalizing (parameter totAL:on) to close a totalization, is necessary to press sequentially EXIT + F, in case of having the printing ticket option activated, a ticket with the totalization value and the number of weighings will be printed.

2.9.3 Operate by external input

To operate with external input, the parameter StArt must to be configured as InP or as tEY. InP.

The process is the same as operating by key but using external inputs. It's necessary to configure tYPE parameter of digital input (d_ In) to the corresponding values:

StArt: Initializes the check-weigher
Ctot: Finishes a totalization (if it's open)

2.9.4 Operate by serial command

To start a weighing through serial port, the parameter StArt can be configured in any mode with the exception of nEt.

With serial commands It's possible to control and have access to the status and data of the application allowing to start a weighing or to close a totaization if is open.

The device allows two different types of serial communication: MODBUS or Simple protocol.

2.9.4.1 MODBUS:

To use MODBUS protocol is necessary to configure RS-485 or RS-232 as ASCII or RTU

- Allows the control of the application through two commands writing in the *Command Register* (41001). These commands are: Start weighing and close a totalization (see table 6.5.7.3).
- Reading the *Input Registers* allows to accede to application's information like: last weighing, status of last weighing, status of present weighing, totalization status, number of weighings totalized and totalized weight.
- Through *Holding Registers* is possible to accede to the application configuration. See table 6.5.10.1.1
- If totalization function is selected, it starts at first weighing and close with a command. Closing a totalization, erase the total value and number of weighings counter and close the totalization ticket if print ticket is activated.

2.9.4.2 SIMPLE PROTOCOL:

To use simple protocol communication, it's necessary to configure the serial port (RS-485 or RS-232) as DEMAND.

In simple protocol is possible to communicate in two ways:

1. Automatic sending: Every time a new weighing is made, is sent automatically.
2. By request: There are commands to request data to the device and to control the application.

2.9.4.2.1 Automatic sending

To activate automatic sending it's needed to configure PC parameter as rS232, rS485 or bothH depending on which port is needed to use, and configure this port as DEMAND (see 3.4.10). The message sent depends on the format selected in the configuration of the serial port: For.

ATTENTION: F4 and F6 formats are not working with this application. F4 (ADC value) will send 00000 and F6 (repeater connection) will send the present content of display.

2.9.4.2.2 Request mode commands

These are the commands to communicate with the check-weigher. All commands include in the response the three command characters plus the response in of the command (see 6.7)

2.9.5 Operate by weight level

To start a weighing by the level of weight,the StArt parameter must to be configured as nEt. In this working mode, weighing starts when net weight is above the configured value of tr 19. Once finished weighing, weight have to be below of a programmed value to start a new weighing. This programmed value is the parameter tr 19 less the value programmed in parameter bAnd.

The parameters that determine the trigger by weight are:

StArt: Must to be configured as nEt to indicate activation by weight.

tr 19: Weight to start the process.

bAnd: Value to reload the process. When net weight is below the value of tr 19 – bAnd the processes will reload. It means that the device is waiting a new trigger (net weight above tr 19) to start a new weighing.
ATTENTION: Value of tr 19 – bAnd > 0

CAnCEL Possibility to abort the weighing operation, options: oFF/on. If the option is on and weight is below tr 19 – bAnd during *waiting time* step, the operation will cancel and the device stays waiting for another trigger.

2.9.5.1 Graphical description by level of weight

Simple weighing example:

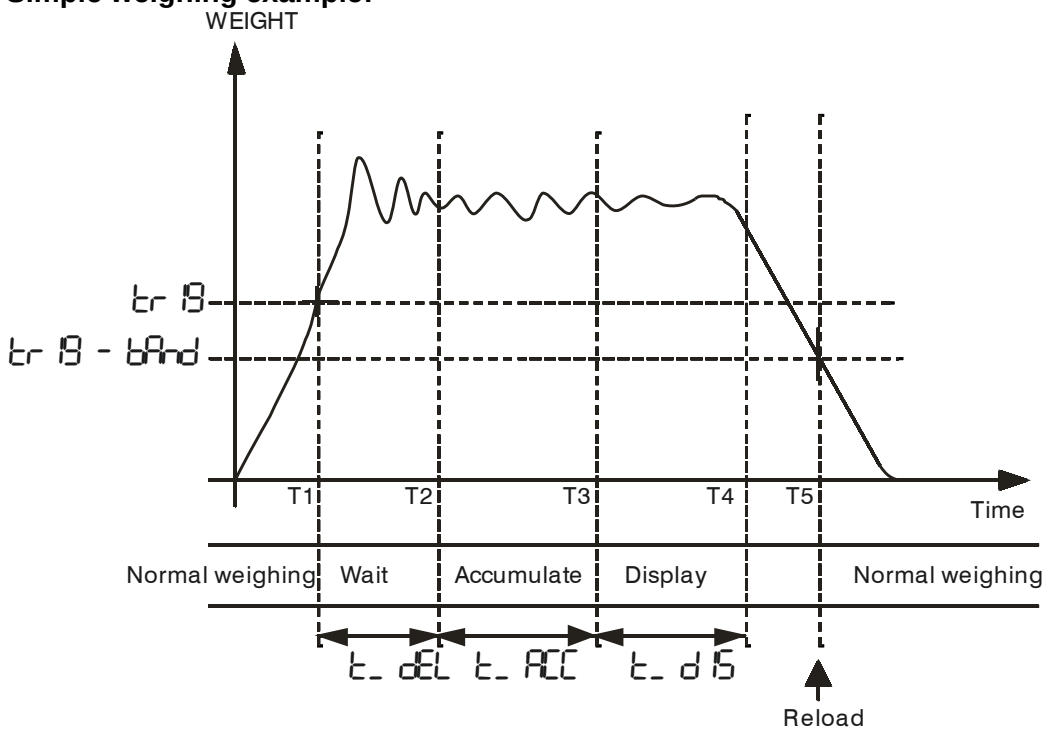

Figure 2.8.5.1.1 Check-weigher in a simple weighing

This example shows the following phases:

T1: Equipment is in normal weighing mode and the weight is above of the programmed trigger level in the tr 19 parameter, starts next phase: *Waiting*.

T2: Ending waiting time(parameter t_dEL) starts the gathering phase.

T3: Ending gathering phase (parameter t_ACC) the weight is calculated and displayed.

T4: Ending the phase of displaying weight (parameter t_d 15). The device returns to normal weighing phase displaying the weight on the scale.

T5: The weight is below the trigger value less the band (parameters tr 19 and bAnd) this provokes the reload of the system and makes possible to start a new weighing cycle. If the reload value is not reached a new weighing will not start although the weight is above the programmed value in the tr 19 parameter.

Automatic cancelation example:

This example needs the CAnCEL parameter configured as on.

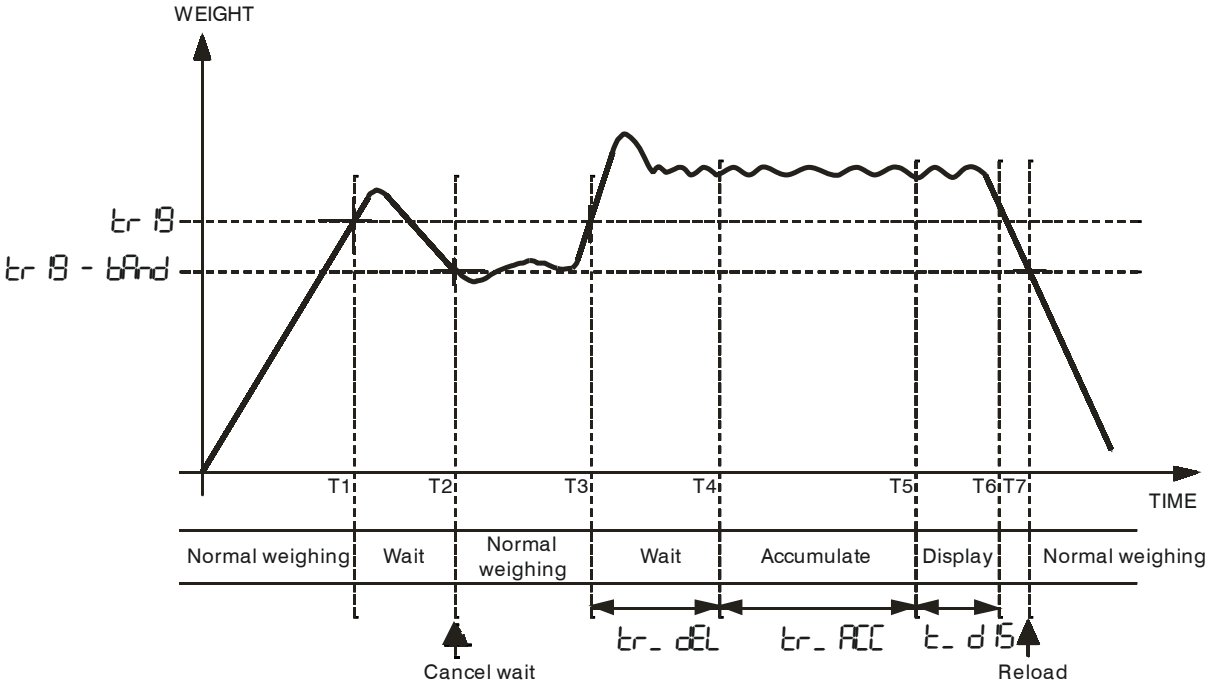

Figure 2.8.5.1.2 Check-weigher with cancel option

This example shows the following phases:

T1: Equipment is in normal weighing mode and the Weight is above of the programmed trigger level in the tr 19 parameter, starting next phase: *Waiting*.

T2: During waiting time the weight is below the value tr 19 – bAnd. Waiting phase is cancelled and returns to normal weighing.

T3: The weight is above tr 19 and returns to waiting phase.

T4: Ending waiting time (parameter t_dEL) starts the gathering phase.

T5: Ending gathering phase (parameter t_ACC) the weight is calculated and is displayed.

T6: Ending the phase of displaying weight (parameter t_d 15) The device returns to normal weighing phase displaying the weight on the scale.

T7: The weight is below the trigger value less the band (parameters tr 19 and bAnd) this provokes the reload of the system and makes possible to start a new weighing cycle. If the reload value is not reached a new weighing will not start although the weight is above the programmed value in the tr 19 parameter.

2.10 Dosing Application (F ILL)

2.10.1 General

This application allows to perform a dosage (charge or discharge) by means of an Start order.

Options to Start the dosage:

1. By key (F key)
2. Automatic, when placing a container on the scale (only at charge).
3. By digital input
4. By serial commands (MODBUS or Simple protocol)

Dosing types:

1. Charge gross net
2. Charge net weight
3. Discharge net weight

Initial and final functions:

1. Initial function: Is executed before starting the dosage (tare, clear tare, turn on the relay…)
2. Final function: Is executed after finishing the dosage (tare, clear tare, turn on the relay…)

2.10.2 Operate from the keyboard

Press F key

- Depending on the configuration of the parameter (ASK), the indicator will ask the target weight to dose (tArGEt)
- The dosage could be at 1 or 2 speeds
  - If key F is pressed during the dosage, the application Will be paused. By pressing the same key again, the dosing will continue.
  - By pressing EXIT+F the dosage will be finished, whether the indicator is paused or dosing
- When arriving at tArGEt wheight, the dosing is finished
- If the device is in error mode, by pressing F key, the dosage will try to continue, by pressing EXIT+F keys, the dosage will finish.

2.10.3 Operate from Digital Input

- We activate the digital input “START”
- Depending on the configuration of the parameter (ASK), the indicator will ask the target weight to dose (tArGEt)
- When arriving at tArGEt wheight, the dosing is finished
- The Digital Input I. PAUSE allows to pause the dosage. Using the Digital Input I. StArt, the dosaje will continue and using the Digital Input I. CAnCE the dosage will finish.

2.10.4 Operate from MODBUS command:

- Start dosage
  - By using 10d command (START register 41001) the dosage application starts using the values stored in target (tArGEt) and Inflight (InFL 19) configured in the setup of the indicator. This option is recommended if the target and inflight weight to dose will be changing or needs be set manually from the indicator keyboard. Those values are stored in the NVM memmory.

- By using 13d command, the dosage Will Start using the values written previously in the data command registers tArSEt (41002, 41003). This option is recommended if is needed to automatically change the target value (without changing inflight value) using MODBUS commands. Those values are not saved in NVM memory.

- When arriving at tArSEt wheight, the dosing is finished
- During the dosage , the following MODBUS commands could be used: PAUSE(12d), STOP (15d), CONTINUE (14d)

See 6.5.7 for more information about how to use the command register.

Start dosage using 13D command.

Write the desired target weight (tArSEt) in the data command registers 41002 and 41003 (the value should be written as a *long* type without decimal point, per example: if the indicator is defined at one decimal and is required to dose 10,5 kilogrames we should write 105 in the data command register. Once the target is written, we should write command 13 in command refister (41001).

In case of sending a command at the wrong momento, the indicator returns the exception Slave *Device Busy (error code 06).* Per example: if the there is no dosage and we send Pause command (code 12) the device Will answer with exception 06 because Pause command cannot be used when the dosage is not running.

Input Registers from 30060 to 30071 lets you accede to the information of the dosage process and read the dose weight when finished.

2.10.5 Operating using Simple protocol:

In order to use the simple protocol, we should configure the operating mode of the serial port where we want to communicate (RS-485 or RS-232) to DEMAND. There is a list of commands to read data and control the application, all the commands and can be checked in (ver 6.8).

2.10.6 Operating with automatic start

- A container is placed on the scale.
- If the wheight falls within the range configured in Lower tare limit (tArE.L) and upper tare limit (tArE.H) during the programmed time in the parameter Start delay (StrtdL) and wheight is stable, the dosage will start.
- Depending on the configuration of the parameter (ASk), the indicator will ask the target weight to dose (tArSEt)
- When arriving at tArSEt wheight, the dosing is finished
- The dosage can be paused or canceled by using: keyboard, digital inputs or serial commands.
- If the indication of the result at the end of the dosage is enabled, it is canceled when the weight drops or equals the value programmed in Lower limit tare (tArE.L)

Before the automatic start, the device checks the following parameters:

- The dosage type cannot be set to Discharge
- The relay of “Fine” should be assigned
- If the dosage is at two speeds, the realay og “Gross” should be assigned
- Parameters of “Lower limit tare” (tArE.L) and “Upper limit tare” (tArE.H) should be correctly configurated
- If parameter “Ask weight” (ASk) is set to no, the device checks if the weight set on tArSEt can be dosed.

If anyone of those conditions fails, the dosage Will not Start.

Example of charge by automatic start by weight:

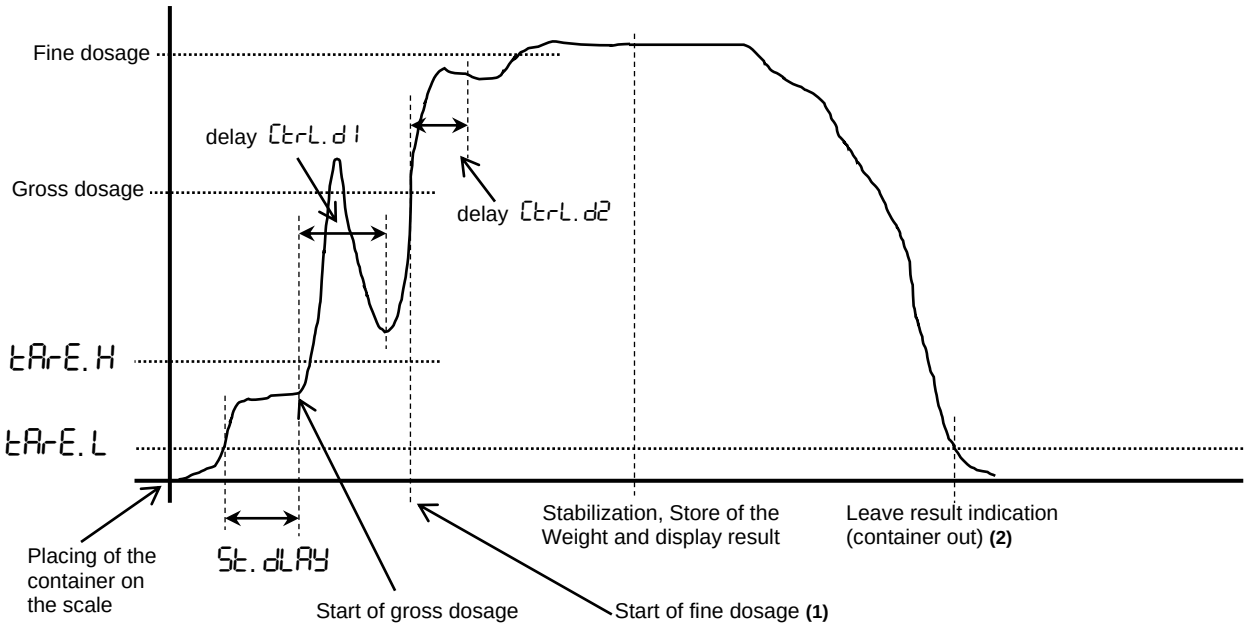

Figure 2.10.6.1 Automatic Start by weight

(1) When the weight is within the programmed range (tArE.L < weight < tArE.H) the timer (St.dLAY) starts counting. If the weight goes out of this range during this time, the timer will start again from zero when the weight enters in-range again. In addition, the weight must be stable to start the dosage. This means that although the start delay time has expired the process will not continue until the weight becomes stable.

(2) To leave the result display indication is needed to remove the container weight or press EXIT key or waiting the delay programmed at End. Ind.

2.10.7 Events during the dosage

During the dosage could appear the following events: PAUSE, ERROR and BLOCK

2.10.7.1 PAUSE

In this mode, the dosage stops. Appears the Message PAUSEd alternate on the screen with the dosed weight and the weight on the scale. To enter in this mode, while dosing:

- Press F F▲ fey
- Activate Digital input PAUSE
- Send the external command PAUSE through the serial port or field bus

2.10.7.2 ERROR

Error message alternate on the screen with the dosed weight and the weight on the scale. Possible errors:

Err.SCL	Failure on the scale (Err_rEF, etc)
Err 7	Lack of material. Fine and Gross relays are off

To try to continue:

- Press F F▲ key
- Digital input Continue
- MODBUS start command (10d)

To cancel the dosage:

- Key EXIT + F▲
- Digital Input CANCEL
- MODBUS command CANCEL (100d)

2.10.7.3 BLOCK

In this mode, appears the message bLoCkd on the screen alternate with the dosed weight and the weight on the scale.
To enter in this mode we should actívate the digital input block (serial or Modbus¿?¿?)
The indiocator leaves blocked mode when:

- Block digital input signal disapears. The process continues where it was.
- Digital input CANCEL is activated (dosing is finished)
- Is canceled by pressing EXIT + F▲ keys: dosing is finished
- MODBUS command CANCEL (100d) is send : dosing is finished

2.10.8 Messages during the dosage:

During the dosage, the following message may appear:

During Start delay (St. dLAY) appears the message StArt.
During the execution of the initial function appears: In I. FUn
During the dosage, appears the weight dosed with a decimal point mark on the right of the last digit.
During the waiting time at final step of the dosage) appears the messsage UA It_t alternates with the dosed weight
During the execution of the final function appears: End. FUn
When the dosage is in Pause, appears the message PAUSEd (alternate with the dosed weight and the weight on the scale).
When the dosage is blocked, appears bLoCkd (alternate with the dosed weight and the weight on the scale).
When an error appears: Err. XXX (alternate with the dosed weight and the weight on the scale).

3 Configuration

3.1 Introduction

Inside the configuration menu and the calibration menu, we can find different types of parameters:

a) Free access, they can always be read and modified.

b) Protected, they can always be read but only modified under certain conditions. There are two types of parameters:

-Metrological parameters: These parameters affect directly the calibration counter, in the schemes are accompanied by the Ⓟ symbol. To be able to modify these parameters it is necessary to set the correct PIN number and the calibration switch (see figure 3.1.1) should be in the unlock position when getting into the configuration menu. For remote access, it will also be needed to have the calibration software seal open.

-None-metrological parameters: These parameters do not affect to the calibration counter, in the schemes are accompanied by the P symbol. To be able to modify these parameters it is only necessary to set the correct PIN number, independently of the calibration switch position or calibration software seal.

The calibration counter is shown on the display when turning on the indicator.

3.1.1 Calibration switch

Only for SWIFT RAIL and PANEL versions. To prevent access to the protected parameters there is a switch located in the left side of the indicator. In the left/down position the switch allows protected parameters to be changed, but in the right/up position the protected parameters cannot be changed.

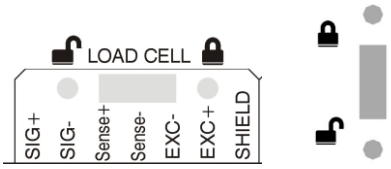

Figure 3.1.1 Calibration switch detail SWIFT Rail and SWIFT Panel

3.1.2 Calibration software seal

The calibration software seal (or calswitch software) prevent access using serial commands to protected parameters and software update.

The calibration software seal can be consulted, "opened" or "closed" through serial commands. Each time the seal is "opened" automatically increments the counter calibration (whether any parameter is changed or not) to keep evidence of this action.

In case of SWIFT RAIL and PANEL versions (keyboard + display) the calibration software seal is not taken into account when the equipment is handled by keyboard, it only takes into account the calibration switch (along with PIN code input).

If calibration switch is in the protected position, protected parameters can not be changed regardless of the condition of the calibration software seal.

Similarly, if the calibration switch is in the protected position you can not upgrade the software regardless of the state of the calibration software seal.

The table below shows conditions needed to modify protected parameters and update indicator’s software using serial commands:

	Calibration software seal open	Calibration software seal close
Calibration switch open	Allowed	Blocked
Calibration switch close	Blocked	Blocked

Table 3.1.2.1 Access allowance using serial commands

The table below shows conditions needed to modify protected parameters and update indicator's software using indcator's keyboard:

	Calibration software seal open	Calibration software seal close
Calibration switch open	Allowed	Allowed
Calibration switch close	Blocked	Blocked

Table 3.1.2.2 Access allowance using keyboard

3.1.3 Basic menu structure

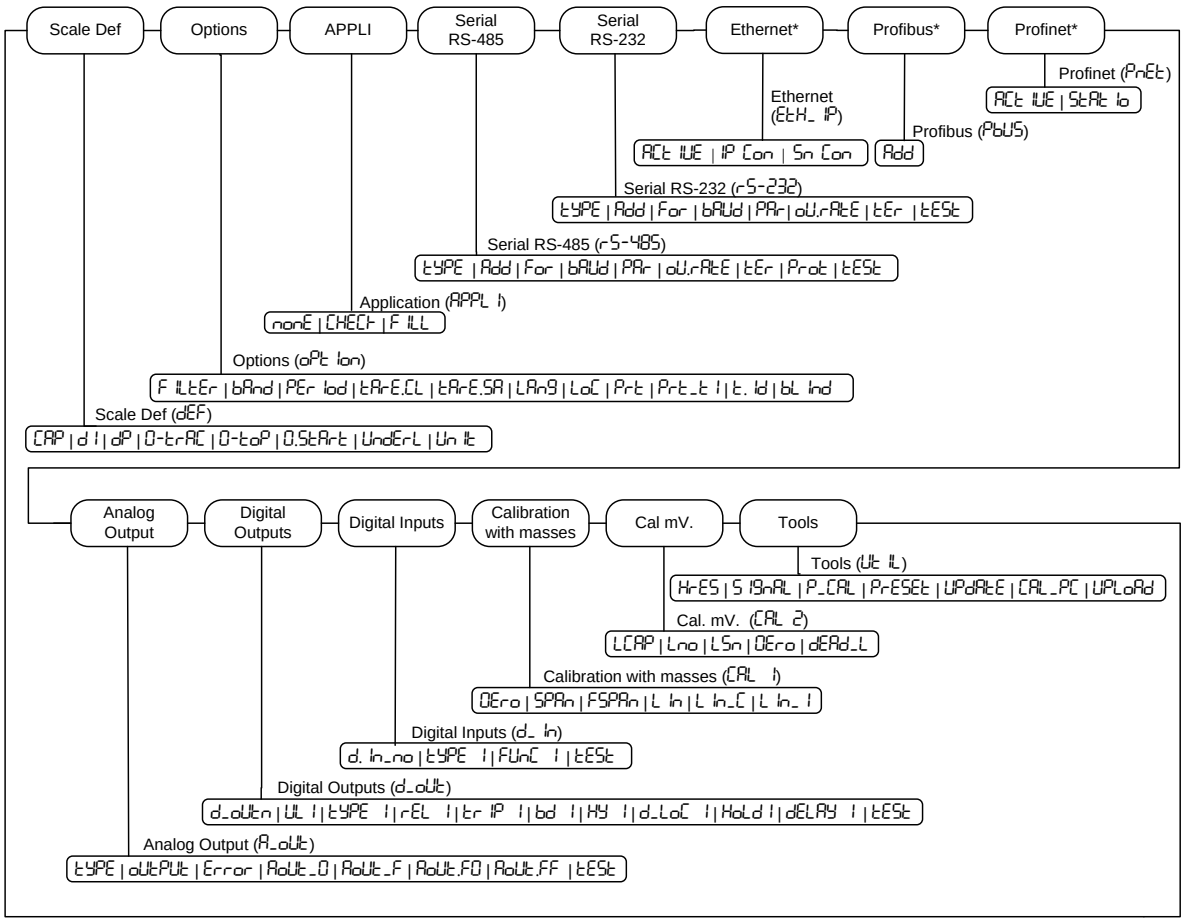

Figure 3.1.3.1 Basic menu structure

To access the configuration menu, it is necessary following these steps:

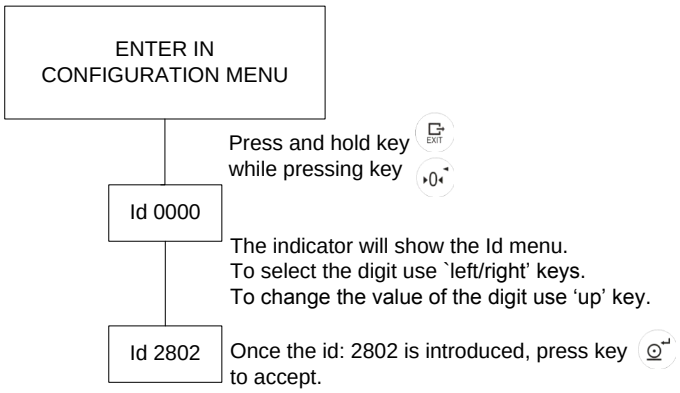

Figure 3.1.2 Enter in the configuration menu

Once we have introduced the Id_2802 of the device (optional), we are inside the configuration menu, being the first configuration screen and from there we can move along the configuration menu.

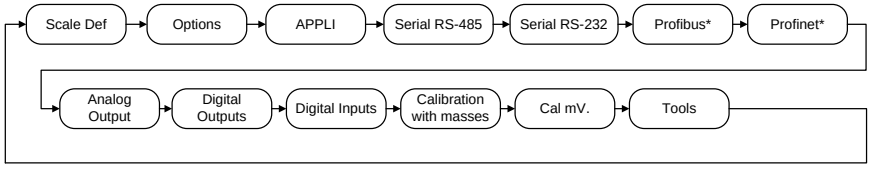

*Not available in all versions of the indicator.

Enter key validates the selection. If we ignore to enter the Id (press enter key with 0000 indication) or we input a wrong number, we will get access to the menu but we will not be able to change protected parameters, marked with a Ⓟ. The factory access code can be found on page 1 and cannot be modified.

Once entered in the calibration-configuration menu, the display will show us the position where we are.

To move through the menus use the cursors. To move in the same level with left (◄) and right cursor (►), to change the level, use enter and exit keys. Once the parameter is selected, if you want to change it, press enter key and set the desired value with increase key (▲), select the digit or chose an option with (◄►) keys. To accept the selection press enter key. Exit from menu press exit key.

It is recommended to print the calibration parameters, once the system is configured, using P_cal function in submenu options (see 5.3).

Entering values and scrolling through the display digits should be performed as follows, for coefficients over 6 digits:

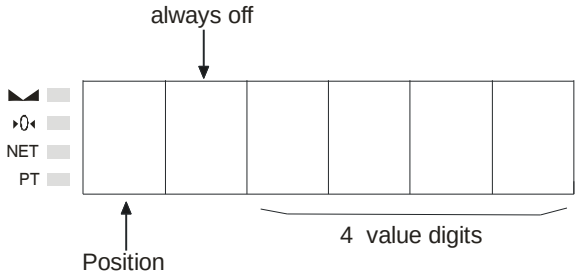

To enter:

Use (◄►) keys to move through the digits.

Use (▲) key to modify parameters.

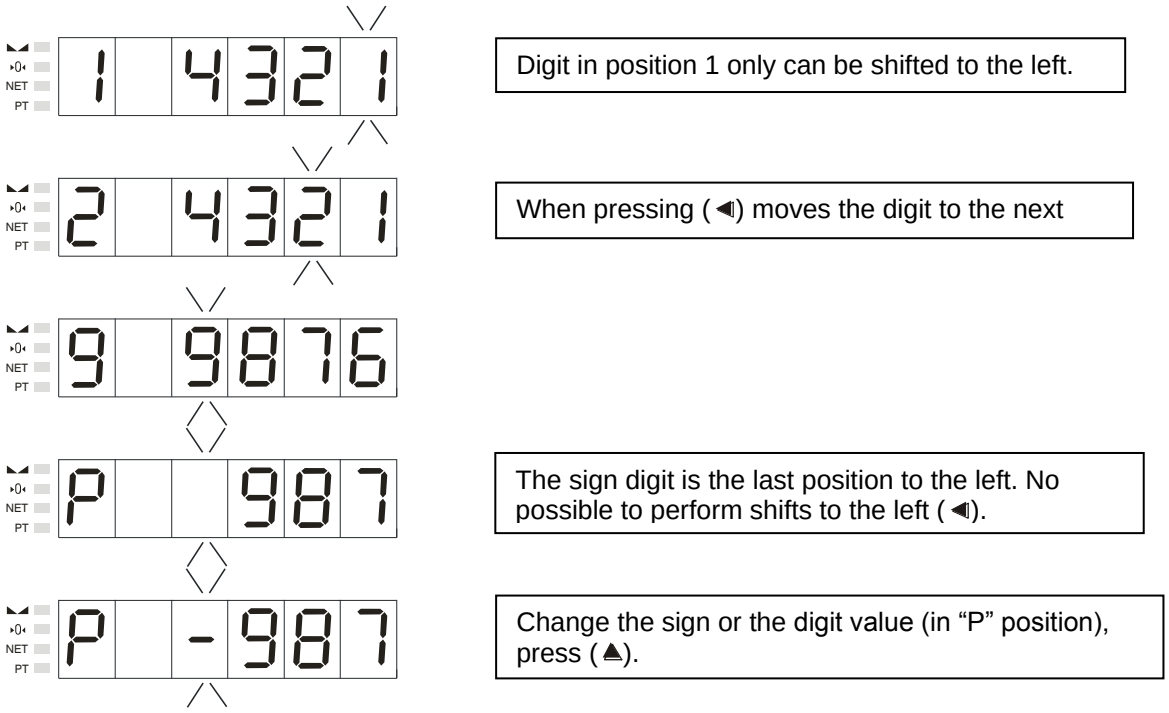

3.2 Scale Definition

Within the Scale Definition configuration level, parameters showed in Figure 3.2.1 can be found.

Once we have introduced the Id_2802 of the device (optional), we are inside the configuration menu (the first screen) and from there, we can move along the configuration menu.

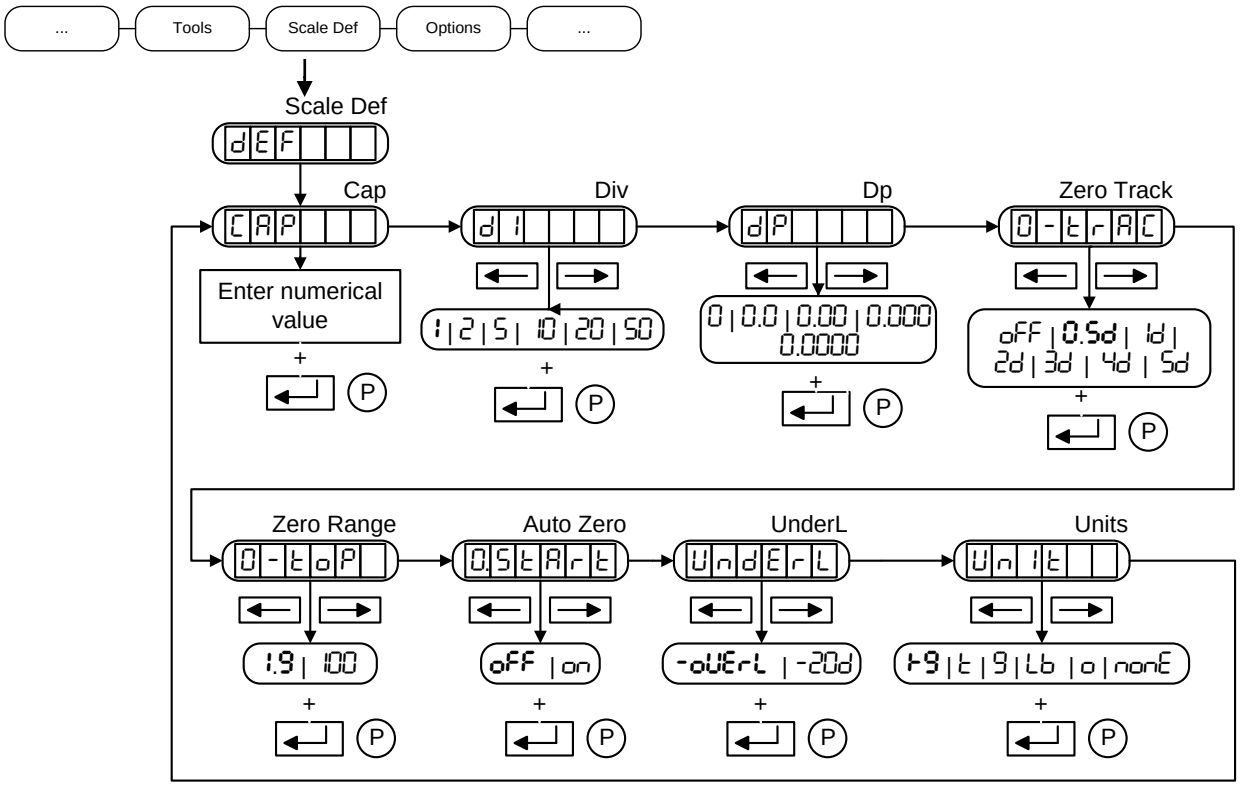

Figure 3.2.1

3.2.1 MAX (CAP)

Maximum capacity of the scale.

3.2.2 DIV (d I)

Value of the scale division.

3.2.3 DP (dP)

Position of the decimal point. By pressing the arrow keys you can move the decimal point to the desired position so, the division of the scale would be in the same unit than the capacity of the scale.

3.2.4 ZERO TRACK (0-trAC)

The level at which the system is automatically zeroed as long as the weight is within the selected band and it is stable.

These are the options:

oFF:	Deactivated function
0.5d:	± 0.5 divisions
1d:	± 1 division
2d:	± 2 divisions
3d:	± 3 divisions
4d:	± 4 divisions
5d:	± 5 divisions

The indicator performs the zero tracking, in the order of 0,5d/seg.

3.2.5 ZERO RANGE (0-toP)

The range within which the scale may be zeroed (→0← key and zero track).

These are the options:

1,9%:	Allows performing a zero if the weight value is ≤1.9% of the maximum capacity.
100%:	Allows performing a zero for the 100% of the maximum capacity.

3.2.6 AUTO ZERO (0.StArt)

The indicator zeroes when it is turned on.

These are the options:

on:	Activated function
oFF:	Deactivated function

Recommendation:

Silos/ Tanks/ Hoppers	oFF
Platforms	on

3.2.7 Minimum Range Limit (UndErL)

Selecting the point at which the computer indicates the input error signal below the minimum range(- - - - - -).

These are the options:

-oUtrL:	Lower range equal to the maximum range changed sign
-20d:	Lower range equal to -20 divisions.

3.2.8 UNITS (Un It)

Weight unit of the scale.

These are the options:

kg:	Kilogram	Lb:	Pound
t:	Ton	o:	Ounce
g:	Gram	nonE:	None

3.3 Options

Within the Options configuration level, parameters showed in Figure 3.3.1 can be found.

Once we have introduced the Id_2802 of the device (optional), we are inside the configuration menu, being the first configuration screen and from there, we can move along the configuration menu.

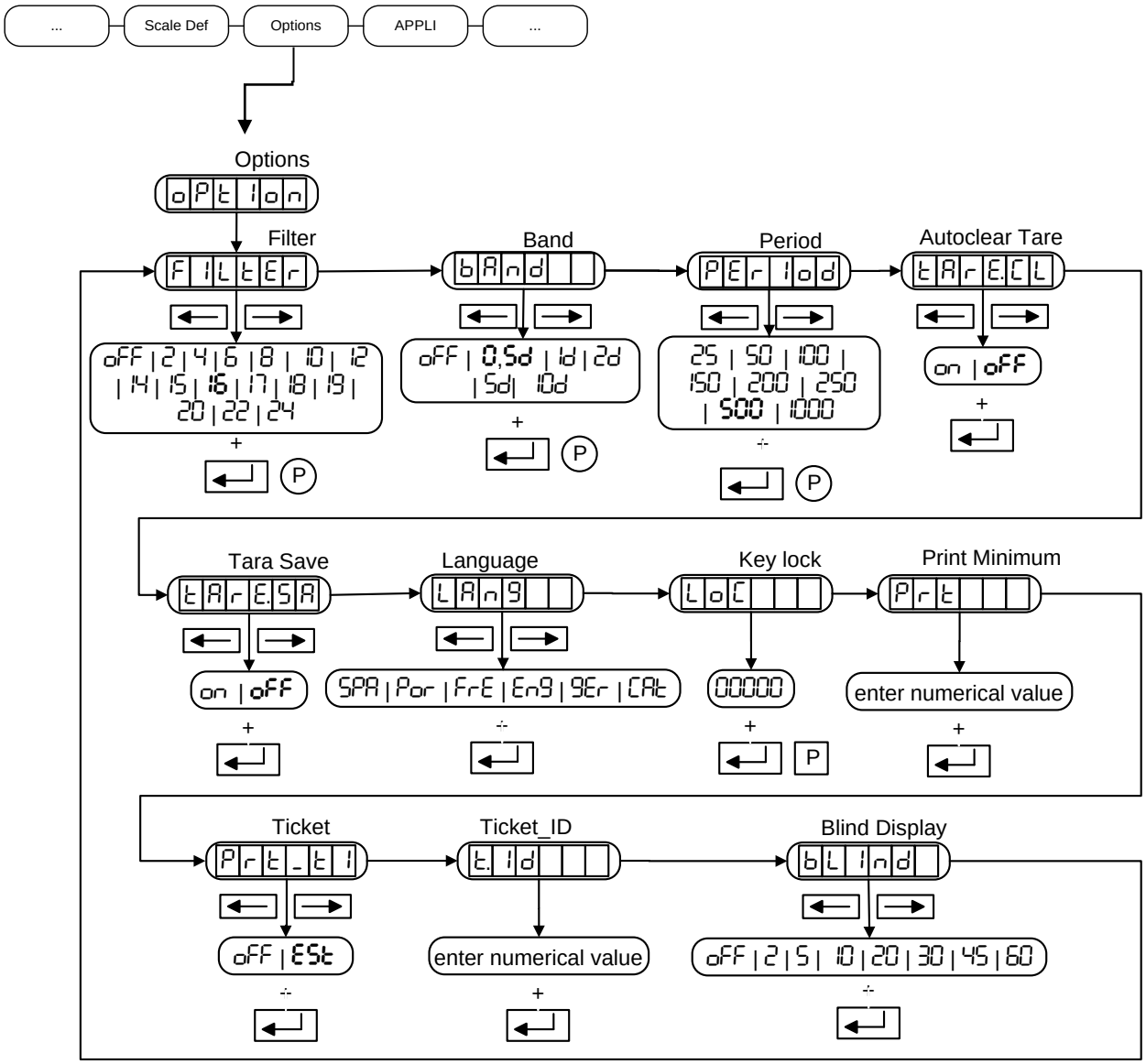

Figure 3.3.1 Options

3.3.1 FILTER (FILtEr)

Filter level. You can choose different filter levels or deactivate this function. The higher the selected value, the higher the filter level and more stable will be the readings although the response will be delayed.

These are the options:

oFF, 2, 4,6, 8, 10, 12, 14, 15, 16, 17, 18, 19, 20, 22, 24

There are 2 kinds of filter:

- For dynamic weighing (Filter= 2..12): Is a 4th grade Low Pass FIR Filter, defined by his cut-off frequency and fast response (see table).

- For static weighing (Filter =14..24): IIR Filter with some feedback moving average blocs (FIR) defined by stabilization time (see table) which allows to obtain a more stable readings.

Next, we show the equivalence table between the type of filter, type of weighing, frequency cut-off (if needed) and stabilization time (settling time).

Filter	Type weighing	Cut-off frequency	Stabilization Time 100% (SETTLING TIME) (*)
OFF	-	-	-
2	Dynamic	125 Hz	65 ms
4		50 Hz	67 ms
6		20 Hz	85 ms
8		10 Hz	85 ms
10		5 Hz	85 ms
12		2 Hz	125 ms
14	Static	-	285 ms
15		-	492 ms
16		-	600 ms
17		-	966 ms
18		-	1305 ms
19		-	1342 ms
20		-	1568 ms
22		-	2200 ms
24		-	2732 ms

(*): Time taken for the device versus a change in the input signal.

In figure 3.3.1.1 we can see which the filter response is for the ADC against an input weight variation and shows the settling time.

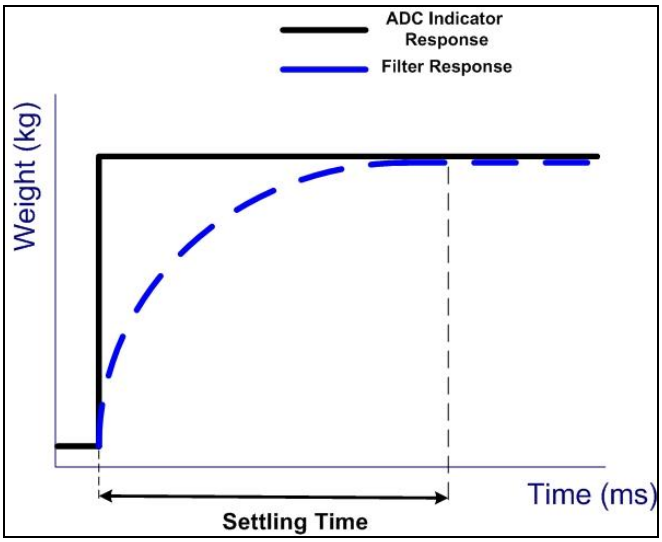

Figure 3.3.1.1

3.3.2 BAND (bAnd)

Inside this menu, we can find the necessary parameters that will help us to define the stability of the system. To meet the stability condition we must fulfill that: the weight does not exceed the defined band, in a period of time.

The level at which motion is detected. Out of this level there is no stability.

oFF:	Deactivated function (the device always shows “stable weight”)
0.5d:	Half division
1d:	One division
2d:	Two divisions
5d:	Five divisions
10d:	Ten divisions

3.3.3 PERIOD (PEr Iod)

Inside this menu, we can find the necessary parameters that will help us to define the stability of the system. To meet the stability condition we must fulfill that: the weight does not exceed the defined band, in a period of time

Period of time in which we want the weight remains within the selected stability band.

The possible options are:

25	25 milliseconds
50	50 milliseconds
100	100 milliseconds
150	150 milliseconds
200	200 milliseconds
250	250 milliseconds
500	500 milliseconds
1000	1000 milliseconds

3.3.4 AUTOCLEAR TARE (tArE.CL)

It allows removing the tare automatically.

The possible options are:

on, oFF

If that option is oFF the autoclear tare is deactivated. This is the equipment default option and under which the tare is activated until it is manually deactivated (see 2.5.2). When that option is on, the tare acts as follows: if after removing the weight its value is within the range of ¼ divisions around zero (cero LED activated) the equipment automatically deactivates the tare.

3.3.5 TARE SAVE (tArE.SA)

It allows saving a tare and using it after an indicator reboot.

The possible options are:

on, oFF

If that option is on, when setting a tare, the value is saved in the NVM memory and it will remain after a reboot of the indicator.

The tare will be deleted from the NVM memmoty when deleting the tare manually, when setting the zero, when auto clear tare triggers (tArE.CL), after a calibration or while validating a parameter in the tArE.SA menu.

ATTENTION: The number of writes permitted by NVM memory is limited. Although this number is High (typically 1,000,000) avoid activating this option on computers that constantly needs to perform tares (automatic machines).

3.3.6 LANGUAGE (LAnG)

You can choose among different languages for the printed ticket.

The possible options are:

SPA:	Spanish
Por:	Portuguese
FrE:	French
EnG:	English
GEr:	German
CAt:	Catalan

3.3.7 KEY LOCK (LoC)

It locks the keyboard. The parameter treatment is performed with a 5 digit binary number. The value 1 locks the function and the value 0 releases it.

These are the options:

5 | 4 | 3 | 2 | 1

KEYB - LOCK	Keyboard lock
PRINT - LOCK	PRINT key lock
TARE - LOCK	TARE key lock
ZERO - LOCK	ZERO key lock
F - LOCK	F key lock

3.3.8 PRINT MINIMUM (Prt)

Is the minimum weight value in divisions at which a print ticket request it is accepted. The value can be within 0 and 255 divisions. Any attempt to make an impressions with the weight below the programmed, the error Err.Prn will be displayed.

3.3.9 TICKET (Prt_t 1)

Select the type of ticket to be printed with the Print key.

These are the options:

oFF:	No ticket printing
ESt:	Standard ticket

3.3.10 TICKET_ ID (t Id)

Edit the number of the next printing ticket. The minimum value is 1 and the maximum is 65.000. If a higher or a lower value is introduced, the Err 2 will be displayed.

3.3.11 Blind display mode (bL Ind)

Allows to turn off the display.

These are the options: **OFF**, 2, 5, 10, 20, 30, 45, 60.

OFF indicates that the blind mode is disabled. The weight will be shown on the display.

2..60, to set the time in seconds that the Weight value will be shown on the display before turn off the display and show an intermittent point. The keyboard will be blocked.

To momentary exit the BLIND mode, click EXIT key.

3.4 Aplication: Check-weigher

APPL I allows selecting and configuring the application.

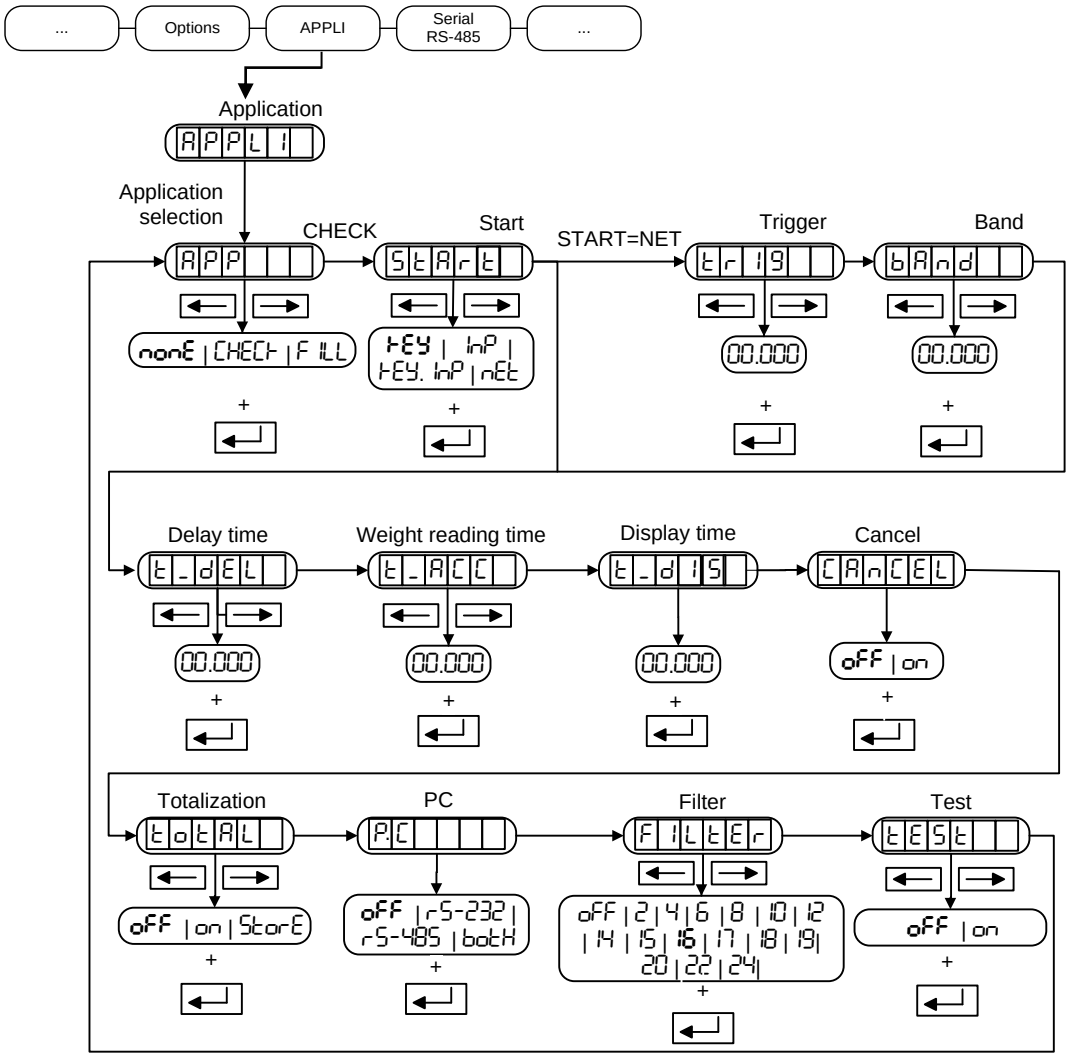

3.4.1 Select application (APP)

Allows selecting the type of application, the options are:

- nonE: Any application selected
- CHEC: Check weigher selected
- F ILL: Aplicación de dosificación

If CHEC application is selected, it will be possible to access to the parameters configuration with the ‘right’ and ‘left’ arrows.

3.4.2 Start (StArt)

It configures the way to start a weight:

- KEY: By key
- inP: By digital input
- KEY. inP: By key or digital input
- nEt: By the net weight (starts when net weight ≥ tr 19)

3.4.3 Trigger (tr 19)

Value of weight to start the process when the StArt parameter is configured in nEt.
Range:
1div ≤ VALUE ≤ MAX
Check if the trigger weight complies with scale division

3.4.4 Band (bAnd)

Band to reload the process when StArt is configured in nEt.
Range:
1div ≤ VALUE ≤ MAX
Check if the trigger weight complies with scale division
Must comply tr 19 > bAnd

3.4.5 Delay time (t_dEL)

It is the time the indicator will be waiting without reading weight once the process starts.
Values are in seconds with a sensitivity of milliseconds: 0.000…50.000s.

3.4.6 Weight reading time (t_ACC)

It is the time in seconds with a sensitivity of milliseconds that the indicator will be gathering weight readings of the weight on the scale: 0.000…50.000s. If this time is programmed to zero, the device will take the current weight without making the average.

3.4.7 Display time (t_d 15)

It is the time in seconds with a sensitivity of milliseconds that the device will show the resultant weight: 0.000…50.000s

3.4.8 Cancel (CAnCEL)

Enables or disables the cancelation of the current weighing cycle:

oFF :	It is not possible to cancel the weighing cycle once has started
on :	It is possible to cancel the weighing cycle

If StArt≠nEt it's allowed to cancel the cycle by pressing EXIT during delay or reading steps
If StArt=nEt the cycle will be automatically cancelled if during delay step the weight goes below tr 19 – bAnd.

3.4.9 Totalization (totAL)

Enables or disables the totalization mode:

oFF:	The device will not totalize.
on:	Weighing results will be accumulated in a totalization value with the number of weighings. This value will be lost when restarting the device.
StorE:	Weighing results will be totalized in a totalization value with the number of weighings. Same functionality as the on option but saving the results in a nonvolatile memory: when restarting the device the total value and the number of weighings will not be lost. It's important to be aware that the nonvolatile memory has a limit of writing cycles (1 million approximated), above that number of cycles the memory could stop working. For this fact it is not recommended to activate the option StorE on an automatic machine that makes a lot of cycles.

3.4.10 Automatic sending by serial port (PC)

Automatic sending through serial port (simple protocol).

oFF	Option deactivated
rS232:	Sending through port RS-232 (port must be configured in DEMAND mode)
rS485:	Sending through port RS-485 (port must be configured in DEMAND mode)
bothH	Sending through both ports (ports must be configured in DEMAND mode)

3.4.11 FILTER (FILtEr)

Filter level. You can choose different filter levels or deactivate this function. The higher the selected value, the higher the filter level and more stable will be the readings although the response will be delayed. This filter is used during the Weight Reading Time of the CheckWeigher. Filter characteristics are the same as the FILTER of the OPTIONS menu (see 3.3.1).

These are the options:

oFF, 2, 4,6, 8, 10, 12, 14, 15, 16, 17, 18, 19, 20, 22, 24

3.4.12 TEST (tESt)

It shows in the display and send through the serial port the result of the dynamic weighing with a resolution x10 for startup tests and certification with OIML R-51.

This parameter is not saved in the NVM, after a reset of the indicator the TEST option turns OFF.

This parameter and the result of the dynamic weighing x10 can be read from MODBUS, PROFIBUS and PROFINET.

With option PC enabled (see 3.4.10), the result of the dynamic weighing x10 can be automatically transmitted through serial port.

These are the options: on, oFF

3.5 Aplication: Dosing

APPL 1 allows selecting and configuring the application.

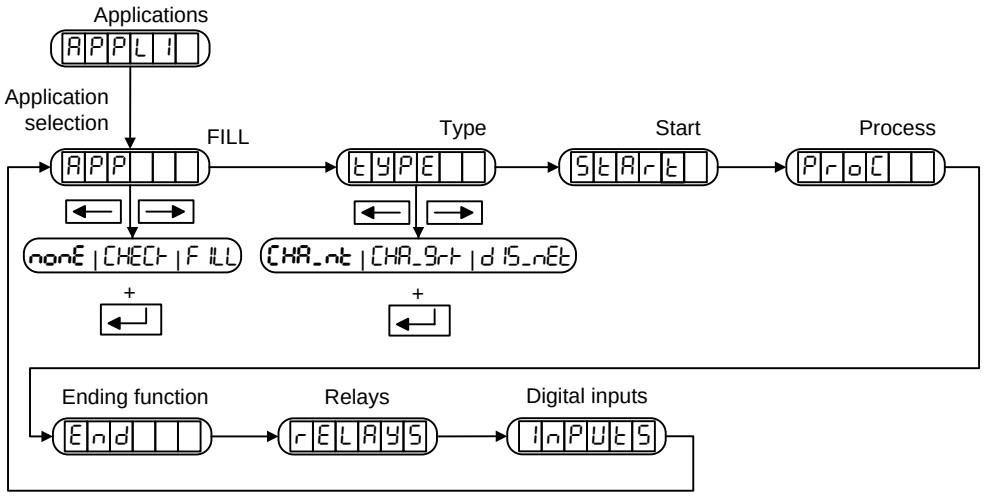

Figure 3.5.1 Dosing application

3.5.1 Select application (APP)

Allows selecting the type of application, the options are:

nonE:	Any application selected
CHEC:	Check weigher selected
FILL:	Dosing selected

If FILL application is selected, it will be possible to access to the parameters configuration with the ‘right’ and ‘left’ arrows.

3.5.2 Type (tYPE)

It configures the type of dosing:

CHA.nt: Net charge
CHA.gr: Gross charge
dIS.nt: Net discharge

3.5.3 Start (StArt)

Allows to configure all the parameters related to the Start of the dosing:

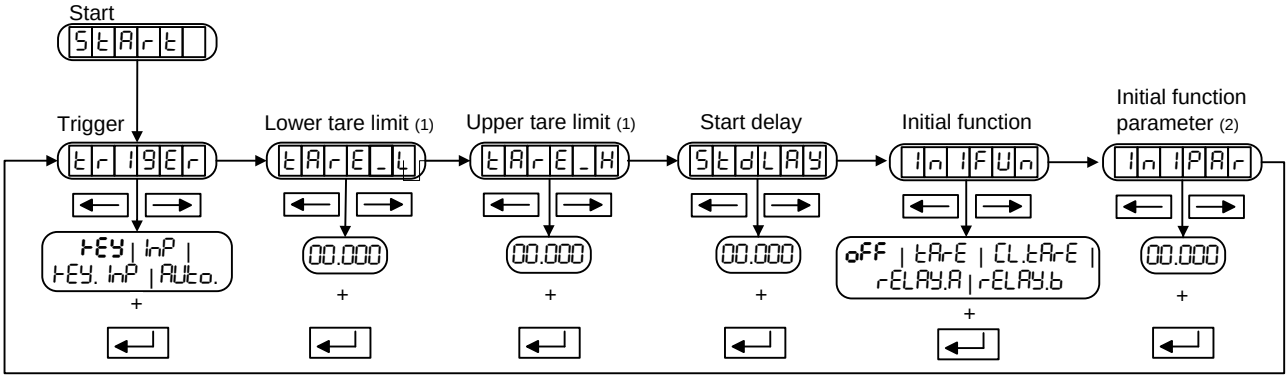

Figure 3.5.1.1 Start dosing

(1) These parameters only appear in the menu if the StArt\trIGEr parameter is set to AUto.
(2) This parameter only appears in the menu if the initial function selected requires a parameter.

3.5.3.1 Trigger (trIGEr)

It configures how to Start the dosing

tEY: By key
InP: By digital input
tEY. InP: By key or digital input
AUto: Automatic Start by Weight. This mode is unavailable when Net discharge is selected (dIS.nt)

3.5.3.2 Lower tare limit (tArE.L)

Minimum value of Weight for the automatic Start (AUto): The dosing may Start if the Weight is equal or greater than this value.

Range: 1 div ≤ VALUE ≤ MAX

3.5.3.3 Upper tare limit (tArE.H)

Maximum value of Weight for the automatic Start (AUto): The dosing may Start if the Weight is equal or lesser than this value.

Range: 1 div ≤ VALOR ≤ MAX

3.5.3.4 Start delay (St.dLAY)

Delay time after all conditions to Start the dosing are met but before starting the dosing.

Range: 0.0…65.5 s
Default value: **0.0 s**

3.5.3.5 Initial function (In I_FUn)

Allows to set a function that will trigger before starting dosing

oFF: No initial fuction configured
tArE: Execution of TARE function
CL.tArE: Execution of CLEAR TARE function
rELAY.A: Trigger RELAY A during the time set in PAr_ In
rELAY.b: Trigger RELAY B during the time set in PAr_ In

3.5.3.6 Initial function parameter (PAr_ In)

Allows to programm the parameter of the Initial function (In 1_FUn) when configured as rELAY. A or rELAY. b. This parameter represents the time that the Relay Will we triggered.

Range: 0.1 - 65.5 s
Default value: **0.5 s**

3.5.4 Process (ProC)

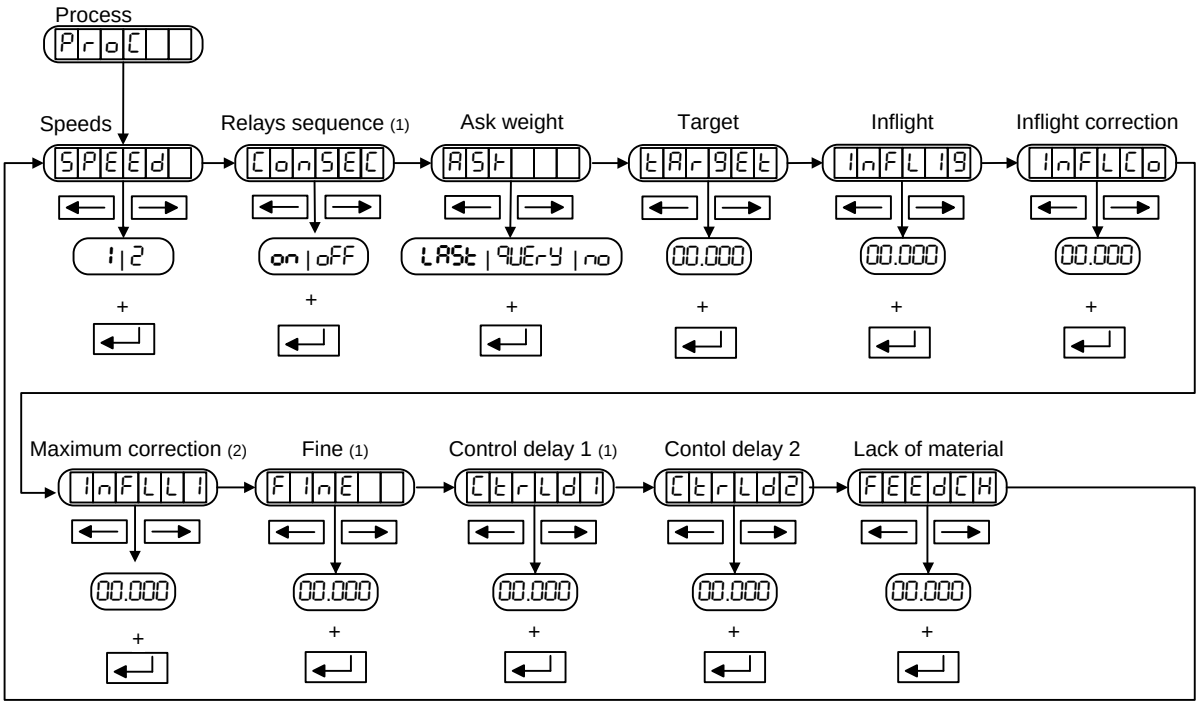

Figure 3.5.4.1 Process

(1) These parameters only appear in the menu if the SPEEd parameter is set to 2 speeds.
(2) The InF. L 1 parameter only appears in the menu if the inflight correction (InF. Co) is activated.

3.5.4.1 Speeds (SPEEd)

It configures if the dosing is made at one or two speeds.

1: 1 speed
2: 2 speeds

3.5.4.2 Condecutive Relay sequence (ConSEC)

It configures the behavoir of the fine and coarse relays.

on: Relays are triggered one after the other
oFF: First are triggered both fine and coarse relays and later only the fine relay

3.5.4.3 Ask weight (ASk)

no: Weight is not asked. The weight to dose is fixed as programmed in tArgEt
LASt: Ask the weight to dose showing the last introduced value
9UEry: Ask the weight to dose showing a zero value

3.5.4.4 Target (tArgEt)

Target Weight to dose if ASk parameter is set to no.

Default value: **0**

3.5.4.5 Inflight material (InFL 19)

Inflight in a dosing is the quantity of product that is still falling once the valves or product control system is closed. To compensate that material fall the SLOW relay us cut before reaching the desired weight. That difference between the desired weight and the cut value is the INFLIGHT.

Range: 0≤ VALOR ≤ MAX
Default value: **0.0**

3.5.4.6 Inflight material correction (InFL.Co)

Maximum correction of inflight material (nFL 19) to be performed at once. If after making the correction value calculation, that value is higher than the MAX. CORRECTION parameter, only that correction will be applied. If it is set to zero that comparison is disabled and so there is no correction limit.
It is the percentage of correction that will be applied to the current inflight material (nFL 19) value after a dosage. At the end of the dosage, the final error obtained is calculated (difference between the actual weight and the desired weight) and the percentage indicated by this parameter is applied, adding or subtracting it from the value of inflight material (nFL 19):

$$ValorDeCorrección = (PesoDeseado - PesoReal) \cdot \frac{CORRECCION}{100}$$

Range: 0% ≤ VALUE ≤ 100%
Default value: **0** % (Disabled: There is no automàtic inflight correction. The inflight (nFL 19) value is fixed as set in tAr-SEt) NO SERÁ COMO EN INLF?

3.5.4.7 Maximum correction (InFL.L 1)

Maximum value of correction of a dosage. If after calculating the correction value it exceeds the value set in "Maximum correction" only this correction will be applied.
Range: 0 ≤ VALUE ≤ MAX
Default value: **0.0** (Disabled: With no límit correction)

3.5.4.8 Fine (F InE)

This parameter determines, along with the inflight, the point at which the COARSE relay will cut, leaving only the FINE relay activated.
To calculate the cut point of the COARSE, we substrat from the desired Weight to dose, the inflight and the FINE weight:
COARSE cut value = *Desired weight – Inflight – Fine*
Range: 0 ≤ VALUE ≤ MAX
Default value: **0**

3.5.4.9 Control delay 1 (CtrL.d 1)

Delay during which the indicator does not follow the weight after opening the coarse relay
Range: 0.00 s ≤ VALUE ≤ 9.99 s
Default value: **0.00 s**

3.5.4.10 Control delay 2 (CtrL.d2)

Delay during which the indicator does not follow the weight after closing the coarse relay
Range: 0.00 s ≤ VALUE ≤ 9.99 s
Default value: **0.00 s**

3.5.4.11 Feed charge material control (FEEd.CH)

It allows to show an error when there is no material to dose during a dosing. This parameter is the maximum time allowed with indication of stability during a dosing. If this parameter is set to 0, the check is disabled.
Range: 0 ...65 s
Default value: **0 s** (Disabled)

3.5.5 Dosing ending (End)

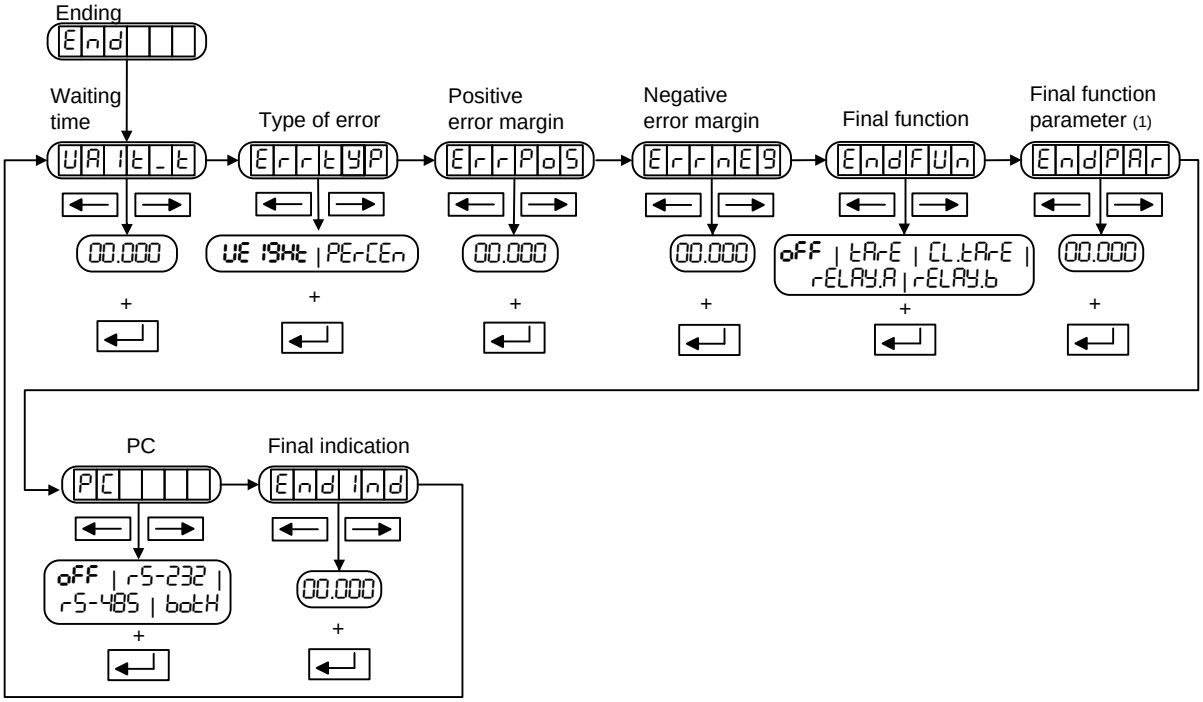

Figure 3.5.5.1 Dosing ending

(1) This parameter only appears in the menu if the final function selected requires a parameter.

3.5.5.1 Waiting time (WAIt_t)

Waiting time at the end of the dosage. Time starts counting when the FINE relay closes. After this time, the indicator waits for weight stability. When there is stability, the margin of error is checked and the dosage is finished.

Range: 0.0 s ≤ VALUE ≤ 65.5 s
Default value: **0.0 s**

3.5.5.2 Error margin: Type (Err.tYP)

Select the type of error margin programmed: in weight or percentage:

WEIGHt: Weight
PERCEn: Porcentage

If the final error exceeds the programmed margin, the error message Err 6 appears:

Press EXIT + F▲ to cancel the process

Press F▲ to continue the process executing the final function, sending the weight value and displaying the result (those functions are excecuted only if they are configured)

3.5.5.3 Positive error margin (Err.PoS)

Select the margin allowed when the dosage exceeds the tARGEt value. Depending on the configuration of the parameter (Err.tYP) the input will be in percentage or weight.

Range: 0 ≤ VALUE ≤ MAX (when working in weight)
0 ≤ VALUE ≤ 100.0% (when working in percentage)
Default value: **0** (Disabled)

3.5.5.4 Negative error margin (Err.nEG)

Select the margin allowed when the dosage doesn't reach the tARGEt value. Depending on the configuration of the parameter (Err.tYP) the input will be in percentage or weight.

Range: 0 ≤ VALUE ≤ MAX (when working in weight)
0 ≤ VALUE ≤ 100.0% (when working in percentage)
Default value: **0** (Disabled)

3.5.5.5 Final function (End. FUn)

It allows to select a function that will be executed after finishing the dosing.

oFF:	No initial fuction configured
tArE:	Execution of TARE function
CL. tArE:	Execution of CLEAR TARE function
rELAY. A:	Trigger RELAY A during the time set in PAr_ In
rELAY. b:	Trigger RELAY B during the time set in PAr_ In

3.5.5.6 Final function parameter (End. PAr)

Allows to programm the parameter of the Initial function (In 1_FUn) when configured as rELAY. A or rELAY. b. This parameter represents the time that the Relay Will we triggered.

Range:	0.1 - 65.5 s
Default value:	**0.5 s**

3.5.5.7 Automatic sending by serial port (PC)

Enable or disable the option to automatically send the dosing result through the serial port. If the port is set to DEMAND, it sends a weight message in the selected format on the serial port.

oFF	Option deactivated
rS232:	Sending through port RS-232 (port must be configured in DEMAND mode)
rS485:	Sending through port RS-485 (port must be configured in DEMAND mode)
bOtH	Sending through both ports (ports must be configured in DEMAND mode)

3.5.5.8 Final dosing function (End. Ind)

Allows to configure the time that the result of the dosing will be displayed on the screen. If set to 65.5 (maximum value) the indication of the final weight will remain indefinitely until the user presses or removes the container from the scale in case of working with automatic start by weight (AUto).
The message will alternate the text End. do. with the dosed weight.

Range:	0.0…65.5 s
Default value:	**2 s**

3.5.6 Relays configuration (rELAYS)

Configuration menu of the relays for the dosing application.

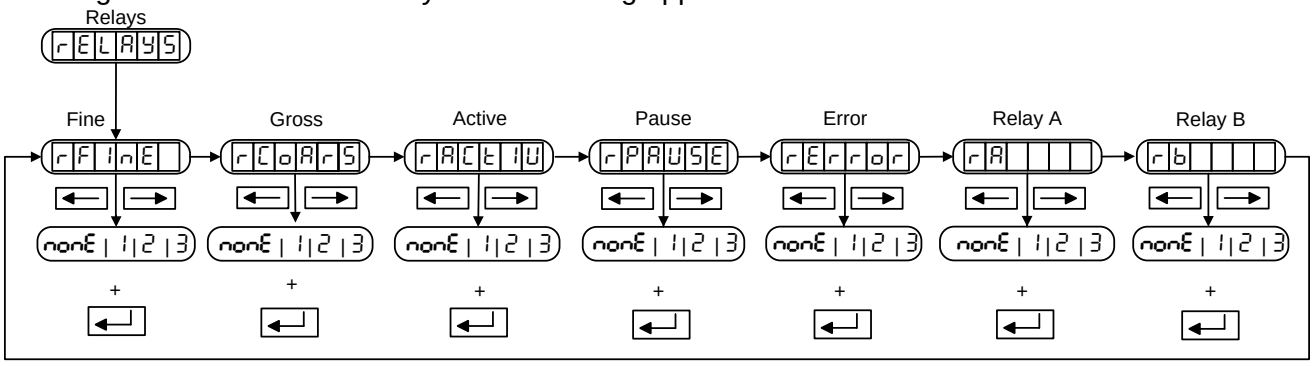

Figure 3.5.6.1 Digital outputs for the dosing application

3.5.6.1 Fine Relay (r. F InE)

Control Relay for Fine flow rate dosage (2-speed dosing) or single flow rate (1-speed dosing).

Values: nonE, 1, 2, 3

3.5.6.2 Coarse Relay (r. CoArS)

Control Relay for Coarse flow rate dosage at 2-speed dosing.

Values: nonE, 1, 2, 3

3.5.6.3 Active Relay (r. ACt IU)

Indicates that the dosage is in progress.

Values: nonE, 1, 2, 3

3.5.6.4 Pause relay (r.PAUSE)

Indicates that the dosage is in pause.
Values: none, 1, 2, 3

3.5.6.5 Relé Error (r.Error)

Indicates that the dosage has stoped due to an error.
Values: none, 1, 2, 3

3.5.6.6 Relay A (r.A)

Relay that can be activated at the beginning or at the end of the dosage.
Values: none, 1, 2, 3

3.5.6.7 Relay B (r.b)

Relay that can be activated at the beginning or at the end of the dosage.
Values: none, 1, 2, 3

3.5.7 Input configuration (InPUtS)

Configuration menu of the digital inputs for the dosing application.

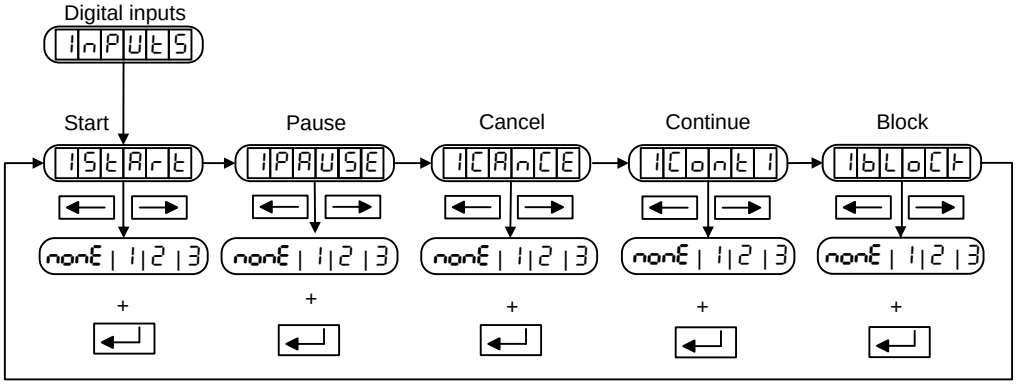

Figure 3.5.7.1 Digital inputs for the dosing application

3.5.7.1 Start Input (1.StArt)

Digital input to start the dosing, necessary in case that the start action (tr 1StAr) is programmed to 'key' (KEY) or 'KEY + Input (KEY. InP).
Values: none, 1, 2, 3

3.5.7.2 Pause input (1.PAUSE)

Digital input to pause the corrent dosing.
Values: none, 1, 2, 3

3.5.7.3 Cancel Input (1.CAnCE)

Digital input to cancel the corrent dosing.
Values: none, 1, 2, 3

3.5.7.4 Continue Input (1.Cont 1)

Digital input to continue a paused or error status dosing.
Values: none, 1, 2, 3

3.5.7.5 Block Input (1.bLoCK)

Digital input to mantain the dosing in pause while the digital input is activated.
Values: none, 1, 2, 3

3.6 Communication port RS-485

Within the Communication port RS-485 level, parameters showed in Figure 3.5.1 can be found.

Once we have introduced the Id_2802 of the device (optional, if we want modify protected parameters), we are inside the configuration menu, being the first configuration screen and from there we can move along the configuration menu.

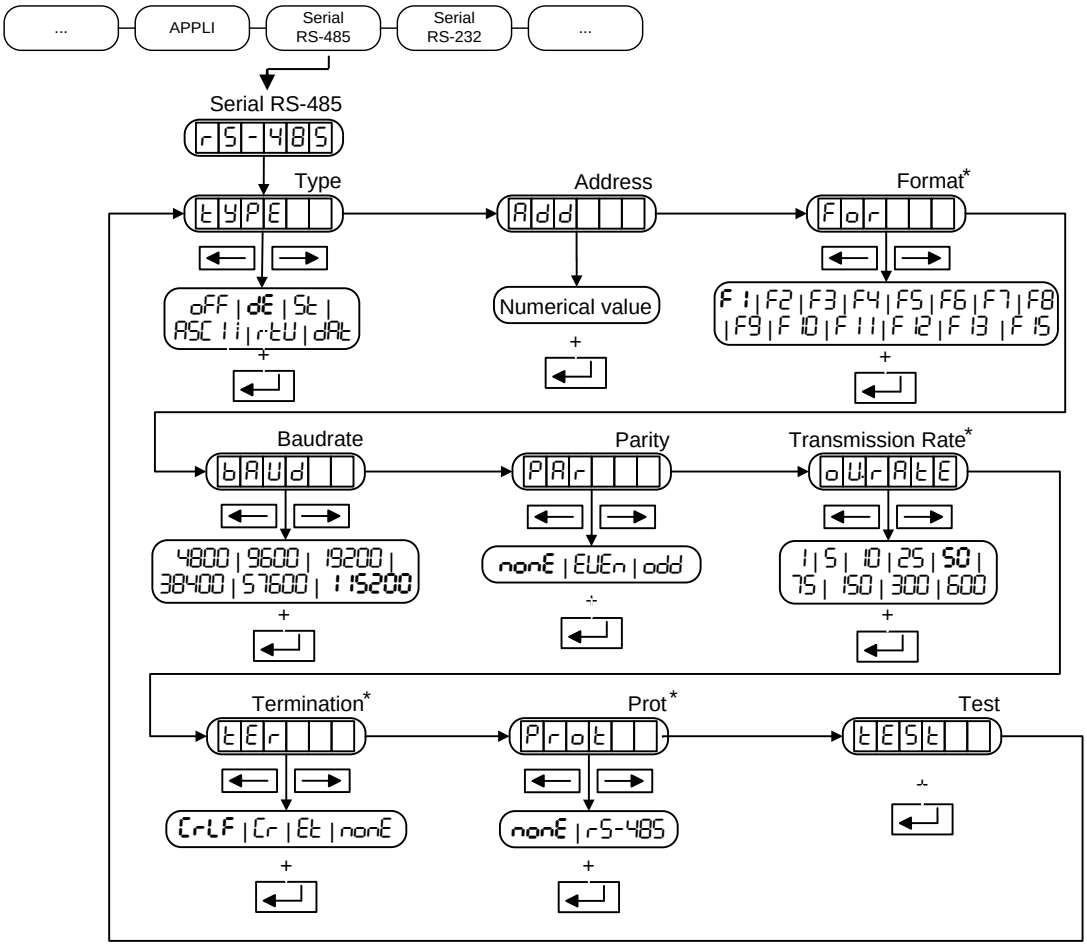

* When TYPE parameter is in mode ACII or RTU, these functions are not enabled.

Figure 3.5.1 Communication port RS-485

3.6.1 MODE (tYPE)

Transmission mode.

These are the options:

DEACTIVATED (oFF):	No data transmission
DEMAND (dE):	Data transmission on external request through the serial port
STREAM (St):	Continuous data transmission
ASCII (ASC II):	MODBUS ASCII
RTU (rtU):	MODBUS RTU
DAT (dAt):	Compatible protocol for DAT400/DAT500

3.6.2 ADD (Add)

It is the address of the equipment in a RS-485 network. Is possible to connect up to 32 devices in the bus.

Possible address values are: 01-99

When having some devices connected to the same bus, they should have different addresses.

3.6.3 FORMAT (For)

Format of the transmitted data, for DEMAND and STREAM.
These are the options:
F 1, F2, F3, F4, F5, F6, F7, F8, F9, F 10, F 11, F 12, F 13, F 15 (see 6.2.2)

3.6.4 BAUD (bAUd)

Transmission speed
These are the options:
4800, 9600, 19200, 38400, 57600, 115200

3.6.5 PARITY (PAr)

Number of data bits and parity
These are the options:

nonE:	8 bits data, no parity
EUEn:	8 bits data, 1 bit even parity (even)
odd:	8 bits data, 1 bit odd parity (odd)

3.6.6 TRANSMISSION RATE (oU.rAtE)

In the STREAM mode, is the number of transmissions per second. Possible options are:
1, 5, 10, 25, 50, 75, 150, 300, 600

It should be noted that the format and the baud rate may limit the actual shipping.

3.6.7 TERMINATION (tEr)

Termination of the data for DEMAND and STREAM
These are the options:

CrLF	<CR>,<LF>
Cr	<CR>
Et	<ETX>
nonE	nothing

3.6.8 PROTOCOL (Prot)

Protocol communication port. Possible values:

nonE:	No protocol
rS-485:	Own RS-485 protocol

3.6.9 TEST (tESt)

This option allows testing the RS-485 serial port. To pass this test, leave the port without connecting strips. The display shows (PASS) if is successfully, or (-FAIL-) if not succeeded.

3.7 Communication port RS-232

Within the Communication port RS-232 level, parameters showed in Figure 3.6.1 can be found.

Once we have introduced the Id_2802 of the device (optional, if we want to modify the protected parameters), we are inside the configuration menu, being the first configuration screen and from there we can move along the configuration menu.

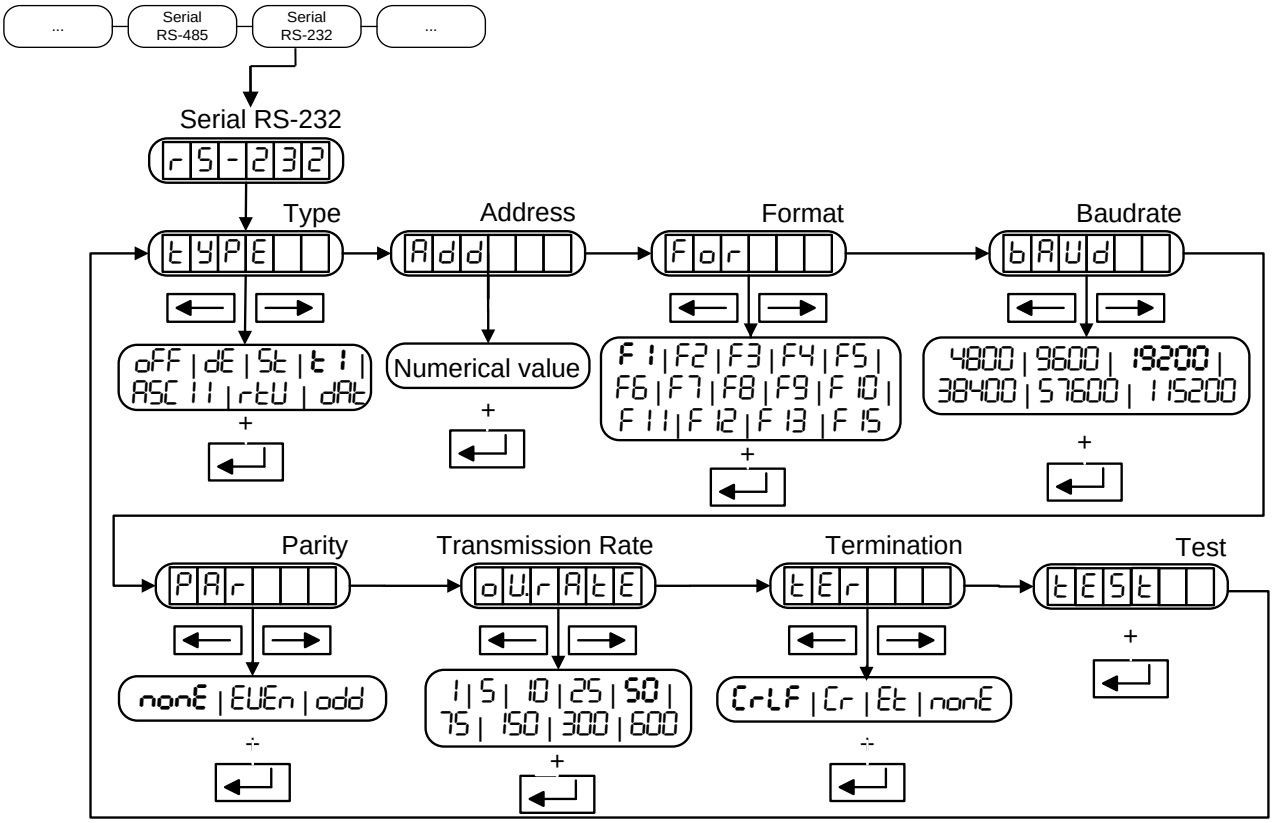

Figure 3.6.1 Communication port RS-232

3.7.1 MODO (tYPE)

Transmission mode.
These are the options:

DEACTIVATED (oFF):	No data transmission
DEMAND (dE):	Data transmission on external request through the serial port
STREAM (St):	Continuous data transmission
TIQUET(t1):	Print out ticket
ASCII (ASC II):	MODBUS ASCII
RTU (rtU):	MODBUS RTU
DAT (dAt):	Compatible protocol for DAT400/DAT500

3.7.2 ADD (Add)

It is the address of the equipment in a network. This parameter is only used in ASCII, RTU and DAT mode (tYPE: dAt). Possible address values are: 01-99

3.7.3 FORMAT (For)

Format of the transmitted data, for DEMAND and STREAM
These are the options:
F1, F2, F3, F4, F5, F6, F7, F8, F9, F10, F11, F12, F13, F15 (see 6.2.2)

3.7.4 BAUD (bAUd)

Transmission speed

These are the options:

4800, 9600, 19200, 38400, 57600, 115200

3.7.5 PARITY (PAr)

Number of data bits and parity.

These are the options:

nonE:	8 bits data, no parity
EUEn:	8 bits data, 1 bit even parity (even)
odd:	8 bits data, 1 bit odd parity (odd)

3.7.6 TRANSMISSION RATE (oU.rAtE)

In the STREAM mode, is the number of transmissions per second. Possible options are:

1, 5, 10, 25, 50, 75, 150, 300, 600

It should be noted that the format and the baudrate may limit the actual shipping.

3.7.7 TERMINATION (tEr)

Termination of the data for DEMAND and STREAM.

These are the options:

CrLF	<CR>,<LF>
Cr	<CR>
Et	<ETX>
nonE	nothing

3.7.8 TEST (tESt)

This option allows testing the RS-232 serial port. Mount an electronic bridge between Rx and Tx. The display shows (PASS) if is successfully, or (-FAIL-) if not succeeded.

3.8 ETHERNET

(This option is only available on SWIFT ETHERNET IP version).

Within the ETHERNET EtH_IP configuration level, we will fid the following parameters:

ACtIUE: Selects whether or not to use the fieldbus (default ON)

IP Con: Configures the IP address (Default value 0.0.0.0)

Sn Con: Configures the subnet mask. (Default value 0.0.0.0)

For more detailed information refer to "**Manual SWIFT Field Bus Communication**" downloadable from Utilcell's website in SWIFT product information section.

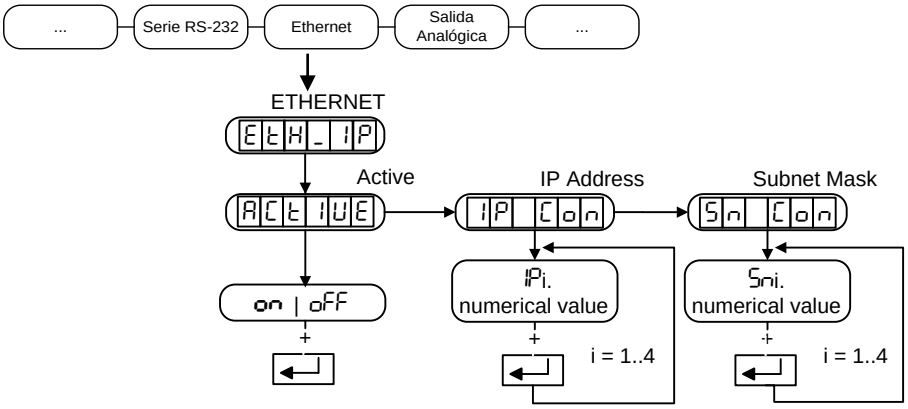

Figura 3.9.1 Ethernet

3.9 PROFIBUS

(This option is only available on SWIFT PROFIBUS version).
Within the Profibus configuration level, the parameter Add showed in Figure 3.9.1 can be found.

For more detailed information refer to "**Manual SWIFT Field Bus Communication**" downloadable from Utilcell's website in SWIFT product information section.

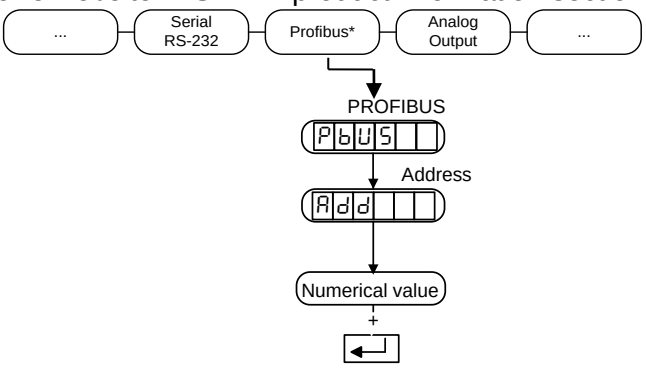

Figure 3.9**¡Error! No se encuentra el origen de la referencia.**.1 Profibus

3.9.1 ADD (Add)

It is the address of the equipment in a network.
Possible address values are: 0-126. Default value: **1**

- If Address is set to 0, Profibus interface is disabled.
- If Address is set to 126, the address can be changed by the Profibus master. Although the master modifies the indicator address, in the indicator menu will always show 126.
- If Address is set to a value between 1 and 125, this will be the address of the device and it will not be possible to be changed by the master.

3.10 PROFINET

(This option is only available on SWIFT PROFINET version).
Within the Profinet configuration level, the parameter ACt IUE and StAt Io showed in Figure 3.10.1 can be found.

For more detailed information refer to "**Manual SWIFT Field Bus Communication**" downloadable from Utilcell's website in SWIFT product information section.

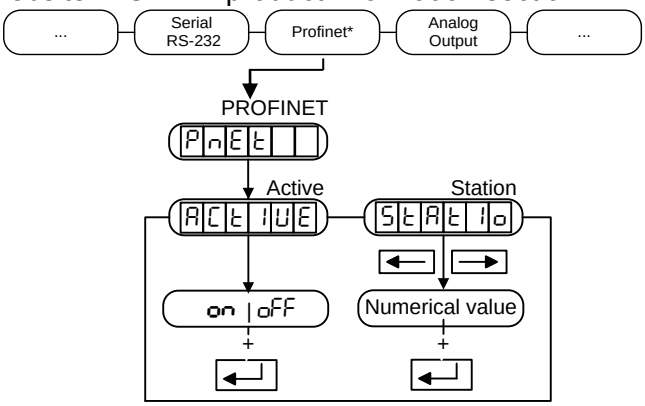

Figure 3.10**¡Error! No se encuentra el origen de la referencia.**.1 Profinet

3.10.1 ACTIVE (ACt IUE)

This parameter is used to enable or disable the Profinet communication.
Possible options are: on, oFF.

3.10.2 STATION NAME(StAt Ion)

The name of the station must to be unique for each device of the bus and can be set remotely by Profinet using the programming software of the PLC or using the SWIFT PC software. The name of a device on a Profinet bus can consist of up to 240 ASCII characters.

The StAt Ion menú allows to set the name manually. This name must contain only three numerical digits that will be attached to a fixed text.The fixed text is: “**abic-prt-**“.To this text will be added the number introduced in the StAt Ion parameter. For example, if we introduce “001” the name of the device on the net will be “abic-prt-001”.

Possiblle values for the identification of the device are: 000-254. Default value: 000.
If the programmed value is 000, it will erase the name of the device (empty string of characters).
While validating the name, the display will show “----“.

It’s recommended to use the same format name in the PLC program to make it easy to replace a SWIFT for a new one by configuring the same station name in the new indicator.

StAt Ion parameter will show the following messages depending on the name of the device.

- “---“ If dashes appear, it means that the name of the device doesn’t meet the standard format of the device: “abic-prt-XXX” where XXX can be from “001” to “254”. Clicking ENTER allows changing this value.
- “000” If three zeroes appear, it means that the device has no name programmed (empty string “”).
- “001”…”254” The name meet the standard format of the device: “abic-prt-XXX”.

3.11 Analog Output

(Trying to access to this menu with a device without analog output will show in the screen Err 3)

Within the Analog output configuration level, parameters showed in Figure 3.9.1 can be found.

Once we have introduced the Id_2802 of the device (optional, if we want to modify protected parameters), we are inside the configuration menu, being the first configuration screen and from there we can move along the configuration menu.

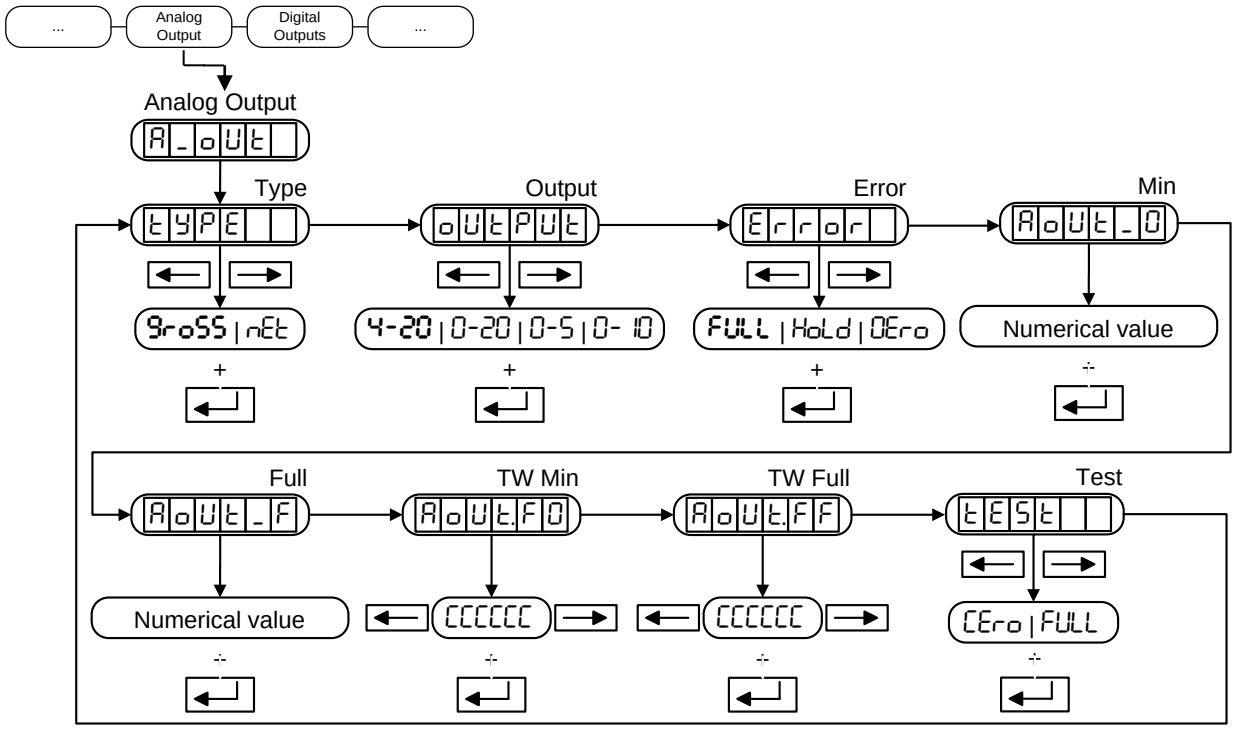

Figure 3.9.1 Analog Output

3.11.1 TYPE (tYPE)

Weight value for the analog output signal

These are the options:

GroSS:	Gross weight value is taken as reference
nEt:	Net weight value is taken as reference

3.11.2 OUTPUT (oUtPUt)

Possible options:

0-20	mA
4-20	**mA**
0-5	V
0- 10	V

When configuring the analog output, please check the physical wire connection according to the diagram wiring.

3.11.3 ERROR (Error)

Output in case of system error

These are the options:

FULL:	Output = MAX
HoLd:	Output doesn't change
0Ero:	Output = MIN

3.11.4 MIN (AoUt_0)

Minimum capacity for the analog output range. If you want to enter a negative value, the minus sign should be placed in the digit to the left.

3.11.5 FULL (AoUt_F)

Maximum capacity for the analog output range.

3.11.6 TW MIN (AoUt_F0)

Fine adjustment for the minimum analog output. Modify the level pressing the arrow keys (◄►).

3.11.7 TW FULL (AoUt_FF)

Fine adjustment of the maximum analog output. Modify the level pressing the arrow keys (◄►).

3.11.8 TEST (tESt)

This option allows testing the analog output. It shows the value of zero (oEro) and full scale (FULL). The kind of output will depend on how you have configured (see 3.9.2)

3.12 Digital Outputs

Within the Digital outputs configuration level, parameters showed in Figure 3.10.1 can be found.

Once we have introduced the Id_2802 of the device (optional, if we want to modify the protected parameters), we are inside the configuration menu, being the first configuration screen and from there we can move along the configuration menu.

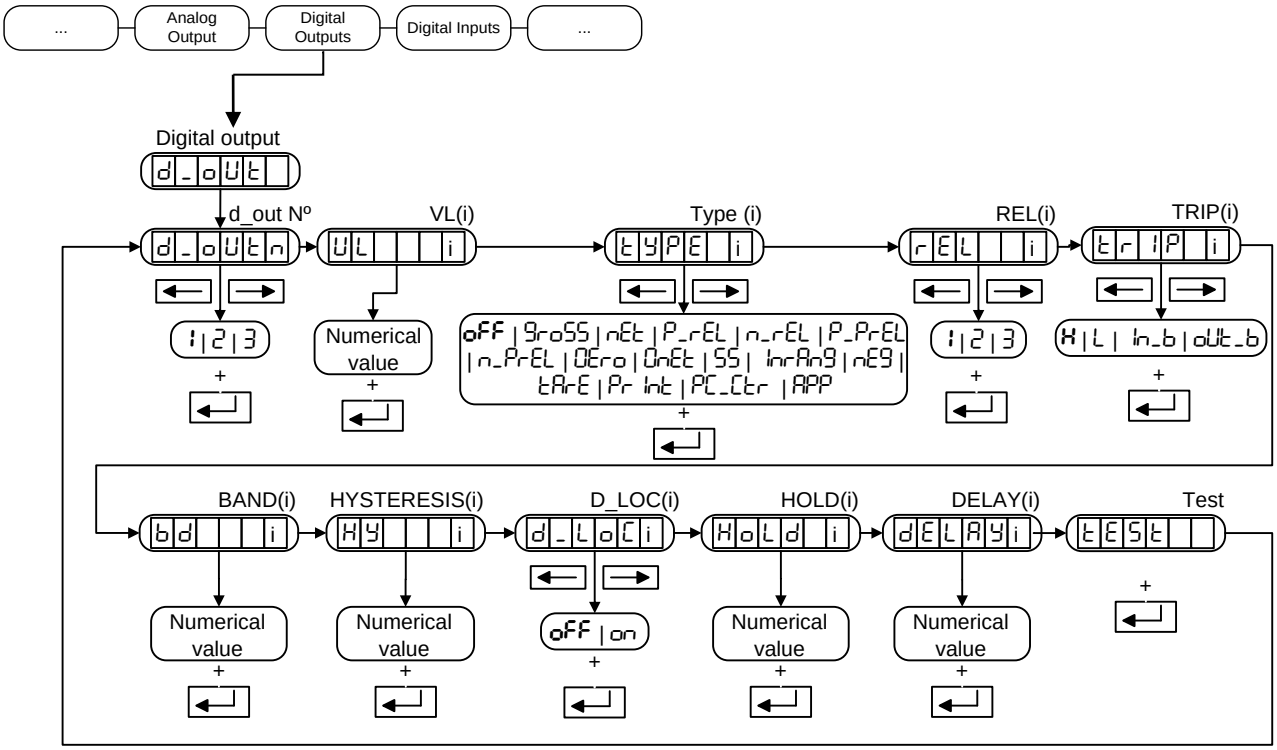

Figure 3.10.1 Digital outputs

3.12.1 D_OUT Nº (d_out n)

Digital output number
Possible options:
1, 2, 3

3.12.2 VL(i) (UL)

Is the value at which the selected output operates. This value should be between –MAX and MAX and also should be compatible with the scale division (d I and dP, see 3.2.2 and 3.2.3). If you want to enter a negative value, the minus sign should be placed in the digit to the left.This value never can be smaller than -99999. If the introduced value is incorrect the display will show the error Err 2.

3.12.3 TYPE(i) (tYPE)

Type of output action.
These are the options:

OFF (oFF):	Deactivated
GROSS (GroSS):	Gross weight value as reference
NET (nEt):	Net weight value as reference
+REL (P_rEL):	Set point trips on the absolute set point value, VL(i), plus the relative value, REL(i)
-REL (n_rEL):	Set point trips on the absolute set point value, VL(i), minus the relative value, REL(i)
+%REL (P_PrEL):	Similar to +REL/-REL except the set point trips on the absolute set point value plus a percentage of the relative value
-%REL (n_PrEL):	Similar to +REL/-REL except the set point trips on the absolute set point value minus a percentage of the relative value
ZERO (0Ero):	The output trips if a zero is in the system
ZERONET (0nEt):	The output trips if the net mode is activated and the display shows a zero
SS (SS):	The output trips if the scale is in the Standstill state
INRANGE (InrAnG):	The output trips if the weight value is within ±MAX and is not detected: Error REF, ADC Error, ADC Fault, Error LOW BAT
NEG (nEG):	The output trips if the weight value is under zero
TARE IN (tArE):	The output trips if a tare is in the system
PRINT (Pr Int):	The output trips while printing
PC_Ctr (PC_Ctr):	Output controlled by the serial port
APP (APP):	Digital Output controlled by the application

3.12.4 REL(i) (rEL)

It defines the reference SETPOINT number on which ±REL or ±%REL are applied. It should be considered that the output number that we are defining must be higher than the reference number. If this condition is not fulfilled, the error message “rEL_Err” will appear on the auxiliary display.

These are the options:
1, 2, 3

3.12.5 TRIP(i) (tr IP)

Configures the trip action for the digital outputs, when it depends on the programmed weight value VL(i). See figures 3.10.5.1 and 3.10.5.2.
These are the options:

H (High):	Trip when weight <VL(i)
L (Low):	Trip when weight ≥VL(i)
In_b (In-Band):	Trip hen weight>VL(i)+BD(i) or weight<VL(i)-BD(i)
oUt_b (Out-Band):	Trip when VL(i)-BD(i)<weight<VL(i)+BD(i)

If the digital output is set in the PC_Ctr mode of the tYPE(i) parameter (see 3.10.3), when you turn on the equipment the output configuration is determined by this operation mode.

HIGH:	ON
LOW:	OFF

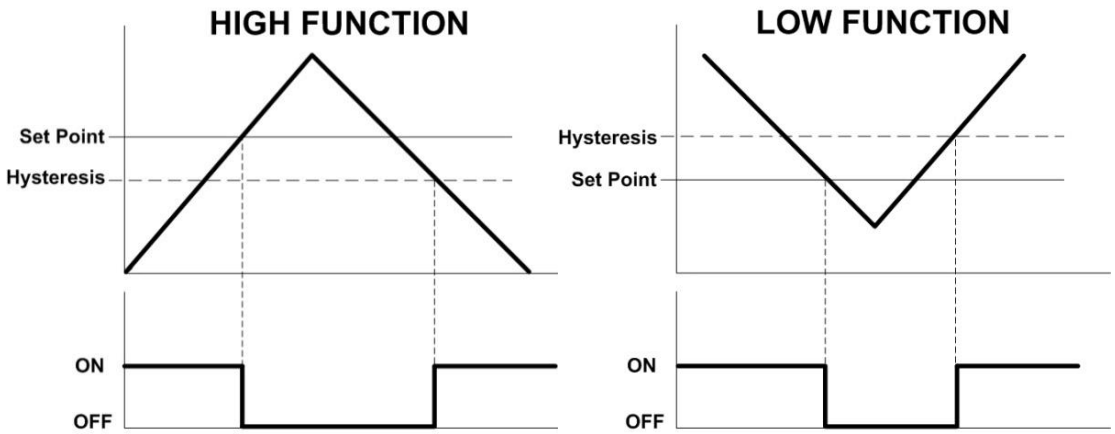

Figure 3.10.5.1 Set point Actuation TRIP High and Low

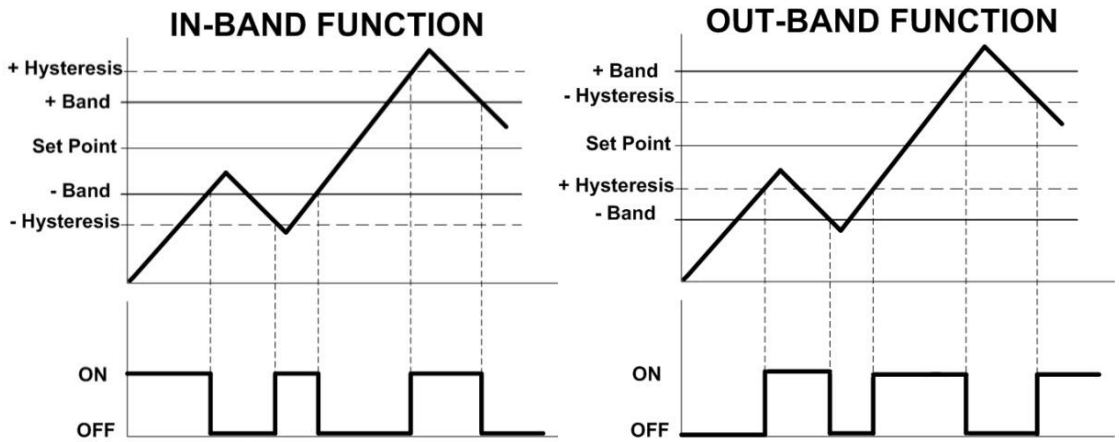

Figure 3.10.5.2 Setpoint Actuation TRIP In-Band and Out-Band

3.12.6 BAND(i) (bd)

A numerical value which determines the value of the IN_B and OUT_B selections of the TRIP parameter

3.12.7 HYSTERESIS(i) (HY)

Determines the hysteresis value which prevents chattering of the digital output.

3.12.8 LOCKED(i) (d_LoC)

It blocks the modification of VL(i) value through the keyboard (key F; see 2.7).

3.12.9 HOLD(i) (HoLd)

Is the option to program the minimum activation time of the selected output.

Possible values: 0.0 – 20.0 s. If the programmed time is higher than 20.0 s the display will show the error Err 2.

3.12.10 DELAY(i) (dELAY)

Is the option to program a delay in seconds to activate the digital output. If during this configured time the activation condition disappears, the output will not activate.

Possible values: 0.0 – 20.0 s. If the programmed time is higher than 20.0 s the display will show the error Err 2.

3.12.11 TEST (tEST)

This option, allows the user doing a test for the digital outputs, by activating (1) or deactivating (0) these outputs. To select an output, we use right and left key. To activate (1) or deactivate (0) the output press F key

This option allows to enable (1) / disable (0) the digital outputs to execute a function test.
To select one the outptut we move the left/rights keys. To enable (1) / disable (0) press the UP key.
To access this option the pin number is mandatory.

3.13 Digital Inputs

Within the Digital inputs configuration level, parameters showed in figure 3.11.1 can be found.

Once we have introduced the Id_2802 of the device (optional, if we want to modify the protected parameters), we are inside the configuration menu, being the first configuration screen and from there we can move along the configuration menu.

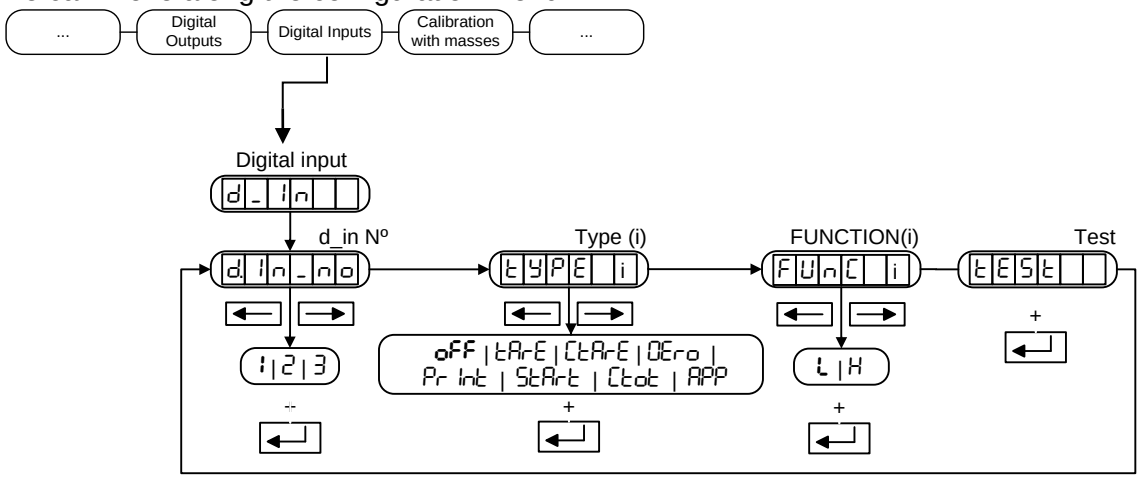

Figure 3.11.1 Digital inputs

3.13.1 D_IN NUM (d_ In no)

Digital input number.
These are the options:
1, 2, 3

3.13.2 TYPE(i) (tYPE)

Input action.
These are the options:

OFF (oFF):	Deactivated
TARE (tArE):	Tare
CLRTARE (CtArE):	Deactivate tare
ZERO (OEro):	Zero
PRINT (Pr Int):	Print
START (StArt):	Start application (APP) (see 3.4)
CLRTOTAL (Ctot):	Close an open totalization and print a totalization ticket if RS-232 serial port is configured as Ticket
APP (APP):	Digital Output controlled by the application

3.13.3 FUNCTION(i) (FUnC)

Input action mode:
These are the possible options:

LOW:	From HIGH to LOW (Falling edge)
HIGH:	From LOW to HIGH (Rising edge)

3.13.4 TEST (tEst)

This option allows you check if the digital inputs are enabled (1) or not (0)

3.13.5 Examples of application

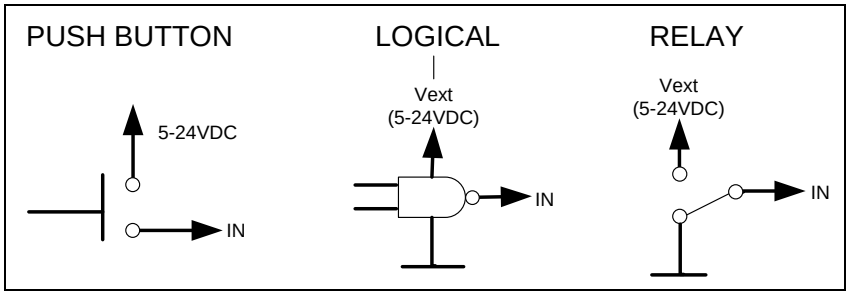

Figure 3.11.3.1 Examples of application

4 Calibration

4.1 Calibration with masses (CAL 1)

Within the Calibration with masses (CAL 1) configuration level, parameters showed in Figure 4.1.1 can be found.

Once we have introduced the Id_2802 of the device (optional, if we want to modify the protected parameters), we are inside the configuration menu, being the first configuration screen the next; from here, we can move along the configuration menu.

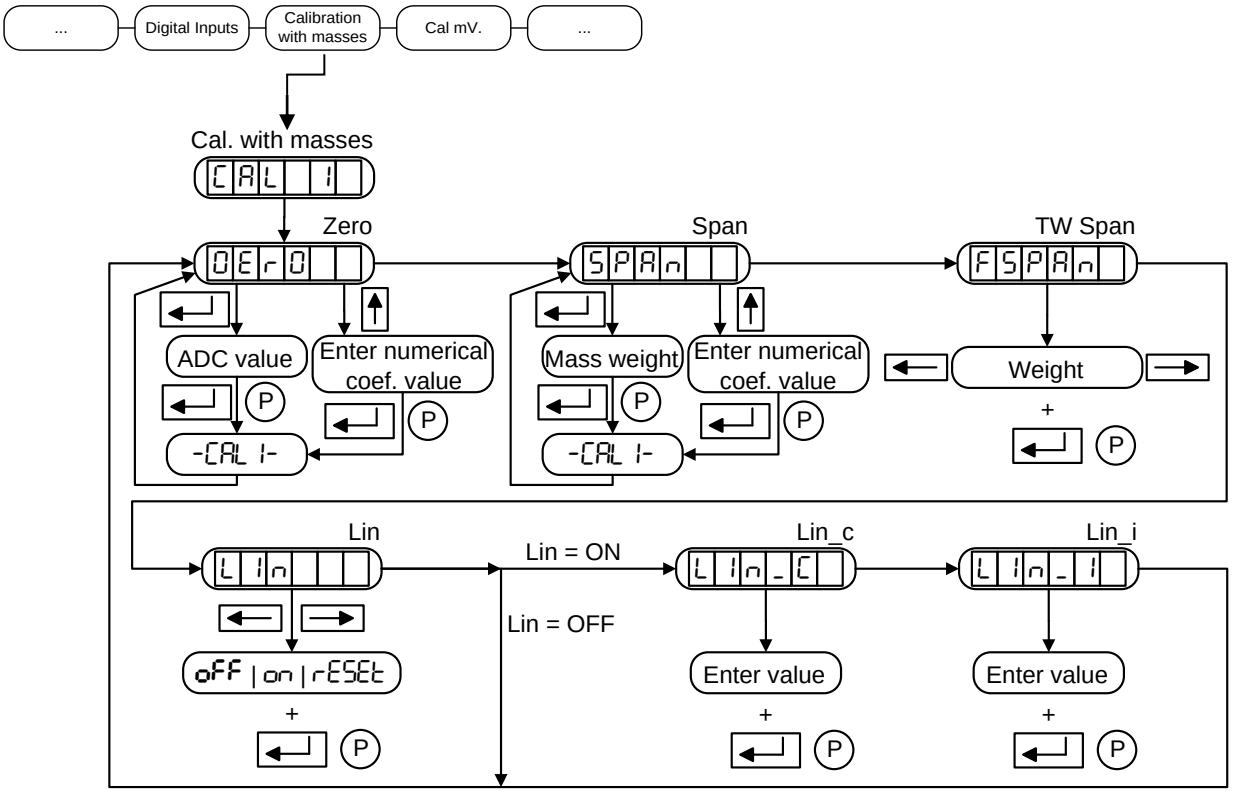

Figure 4.1.1 Calibration with masses

4.1.1 ZERO (0Ero)

- Automatic zero adjustment: To automatically adjust the zero value make sure there is no weight on it and press the enter key. The indicator will show the present coefficient value. On pressing enter again the message *CALIB* will be shown while the indicator assesses the present value. Once accepted it will be stored. It is recommended to keep this coefficient value or print it by means of printing the parameters (see 5.3).

- Manual zero adjustment: this coefficient is the internal value of the ADC, and corresponds to the calibration zero value; to introduce manually the zero value (F▲) key has to be pressed. Then we select the corresponding digit with the Arrow Left and Arrow Right keys (◄►). The selected digit value is modified with Arrow Up key (▲). If a negative value has to be introduced it can only be done with the first left digit. The negative sign appears after the 9 number.

4.1.2 SPAN (SPAn)

- Automatic span adjustment: To automatically adjust the span, place a certified test weight on the scale and press Enter. The maximum scale value is displayed, if the weight placed on the scale is different, key in the real value. Press the Enter key and *CALIB* is displayed while the unit calculates the span coefficient. After accepting it, it is stored. It is recommended to keep this coefficient value or print it by means of printing the parameters (see 5.3).

- Manual span adjustment: this coefficient is an internal software value that corresponds to the calibration coefficient gain value, of the scale. To introduce manually the span value (F▲) key has to be pressed. Then we select the corresponding digit with the Arrow Left and Arrow Right keys (◄►). The selected digit value is modified with Arrow Up key (▲). If a negative value has to be introduced it can only be done with the first left digit. The negative sign appears after the 9 number.

ATTENTION
The zero and span coefficients value is obtained by means of the impression of the parameters (see 5.3)

4.1.3 TW SPAN (FSPAn)

Span fine adjustment. Use the right/left arrow keys to adjust this value. Press Enter to store the value.

4.1.4 LIN, LIN_C and LIN_I (L In,L In_C,L In_ I)

To activate the linearity adjustment function.
These are the options:
OFF: Linearity adjustment deactivated
ON: Linearity adjustment activated
RESET: Linearity adjustment deactivated and linearity adjustment parameters cleaning
In On position, you access parameters LIN POINT, LIN COR.
LIN_C: Applied load (known value of the mass chosen for the correction)
LIN_I: Indication of the applied load
These parameters allow the correction of a possible non linearity in the system.
This adjustment is performed in the point you choose from 0 to MAX.
After adjusting the scale (zero and span), if a linearity error is detected due to a discrepancy between the load and the system indication, choose a point where discrepancy is more significant and then adjust linearity.
The linearity error disappears at that point and is fundamentally reduced in the rest of points (see figure 4.1.4.1).

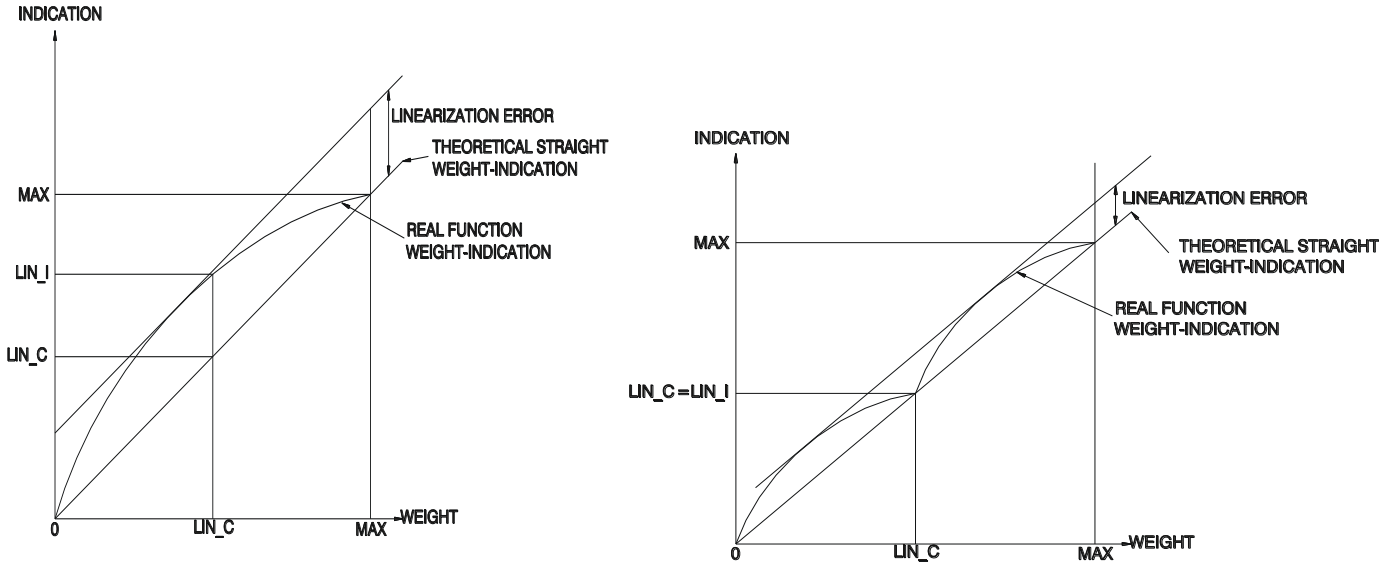

Figure 4.1.4.1 Behavior linearity adjustment, before and after, respectively

This is the procedure:

1-Select the Reset option in the LIN parameter, in order to assess the system linearity without any pre-existing correction. The LIN parameter is deactivated and any previous correction is deleted.

2-Place a known load in a point of the range where there is a significant linearity error. Note down the indication value.

3-Select ON in the LIN parameter and then you gain access to LIN_C and LIN_I parameters.

4-Key in the load value in the LIN_C parameter and press Enter to confirm.

5-Key in the indication value in the LIN_I parameter and press Enter to confirm.

6-The correction has been made.

7-This procedure can be repeated without clearing the previous correction (continue from point 2).

This adjustment calculates an internal algorithm which will be applied whenever the LIN parameter is ON, even if the indicator is redefined or recalibrated. That is why it is important to deactivate it or delete it if its application is not important anymore.

However, whenever a span adjustment is made (SPAN parameter), in the moment of validating the calculated coefficient a message notifies us that the LIN parameter is activated, where appropriate.

4.2 Numerical Calibration (CAL 2)

If there is no reference weight value, it is possible to make a theoretical calibration using capacity and sensibility values (mV/V) of the load cells used.

For a calibration of maximum precision you always have to use the calibration with masses.

Within the numerical calibration level, parameters showed in Figure 4.2.1 can be found.

Once we have introduced the Id_2802 of the device (optional, if we to want modify the protected parameters), we are inside the configuration menu, being the first configuration screen the next; from here, we can move along the configuration menu.

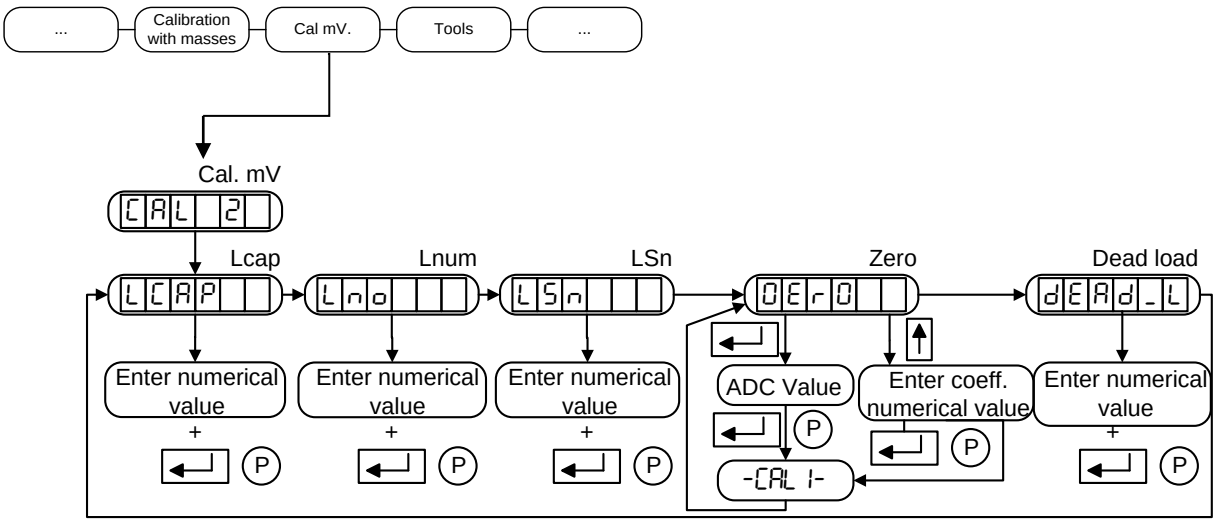

Figure 4.2.1 Numerical calibration

4.2.1 LCAP (LCAP)

Nominal capacity (Emax) of one of the load cells from the scale. It is expressed in the same decimal point used in MAX and DIV (see scale definition 3.2.1, 3.2.2 and 3.2.3).

4.2.2 LNUM (Lno)

Number of load receiver supports. All supports must be counted, both those which rest on load cells and those which do not.

4.2.3 L Sn (LSn)

Load cells nominal sensibility in mV/V (if values are not the same, calculate the average).

4.2.4 ZERO (0Ero)

- Automatic zero adjustment: To automatically adjust the zero value make sure there is not any weight on it and press the enter key. The indicator will show the present coefficient value. On pressing enter again the message *CALIB* will be shown while the indicator assesses the present value. Once accepted it will be stored. It is recommended to keep this coefficient value or print it by means of printing the parameters (see 5.3).

- Manual zero adjustment: this coefficient is the internal value of the ADC, and corresponds to the calibration zero value; to introduce manually the zero value (F▲) key has to be pressed. Then we select the corresponding digit with the Arrow Left and Arrow Right keys (◄►). The selected digit value is modified with Arrow Up key (▲). If a negative value has to be introduced it can only be done with the first left digit. The negative sign appears after the 9 number.

ATTENTION
The zero and span coefficients value is obtained by means of the impression of the parameters (see 5.3)

4.2.5 Dead load (dEAd_L)

It is the dead load of the structure.

By changing this parameter changes the zero of the system. This parameter can be used in scales where is not possible to empty the scale to perform the zero calibration of the system.

It can be used in the following cases:

- In a weighing system where is not possible to empty it, to perform the zero calibration, but we know the dead load of the structure: the zero calibration of the system can be done, without being necessary empty the scale, according to procedure “example of use 1”.

- In a weighing system where is not possible to empty it, to perform the zero calibration, we do NOT know the dead load, but we know the net weight of the product. In this case, we can perform the adjustment of the system and deduce the dead load of the system, according to procedure “example of use 2”. The accuracy of the dead load obtained, depends on the accuracy of the net weight.

We should keep in mind when modifying this parameter, we are modifying the zero of the system and consequently, the internal calibration counter will increase.

If we modify the gain of the device (SPAn), the dead load of the system will be recalculated.

The same happens when doing a zero through ZERO option (see 4.2.4).

Example of use 1: Performs the zero adjustment of the system, knowing its dead load.

1. First of all, we should define the weighing system through menu dEF (see 3.2).
2. Once the definition it is done, we have to enter in menu CAL 2 (see 4.2) and set the capacity, sensitivity and number of load cells.
3. Next, we have to set the Dead Load value of the structure (dEAd_L), (see 4.2).

Example of use 2: Performs the deduction of the Dead Load of the system, knowing its net Weight of the product.

1. First of all, we should define the weighing system through menu dEF (see 3.2).
2. Once the definition it is done, we have to enter in menu CAL 2 (see 4.2) and set the Dead Load value to 0.
3. Next, we have to perform the numerical calibration of the gain. We have to set the capacity, sensitivity and number of load cells, (see 4.2).
4. With menu Weight x10 (H_rES) (see 5.1), we can see the weight of the scale multiplied by ten. This weight is the gross weight (GW) above the load cells.
5. We will calculate the Deal Load of the system by subtracting the gross weight (GW), obtained in paragraph 4, the net weight NW (known or estimated) of the material inside the silo. So Deal Load is DL= GW – NW.
6. Now we have to set this value of Deal Load obtained in (dEAd_L), and validate the value.
7. Once the (dEAd_L) value is validated, the device recalculates the new zero and adjusts the system, saving the adjustment parameters.

5 Tools

Within the tools level, parameters showed in Figure 5.1 can be found.

Once we have introduced the Id_2802 of the device (optional, if we want to modify the protected parameters), we are inside the configuration menu, being the first configuration screen the next; from there, we can move along the configuration menu.

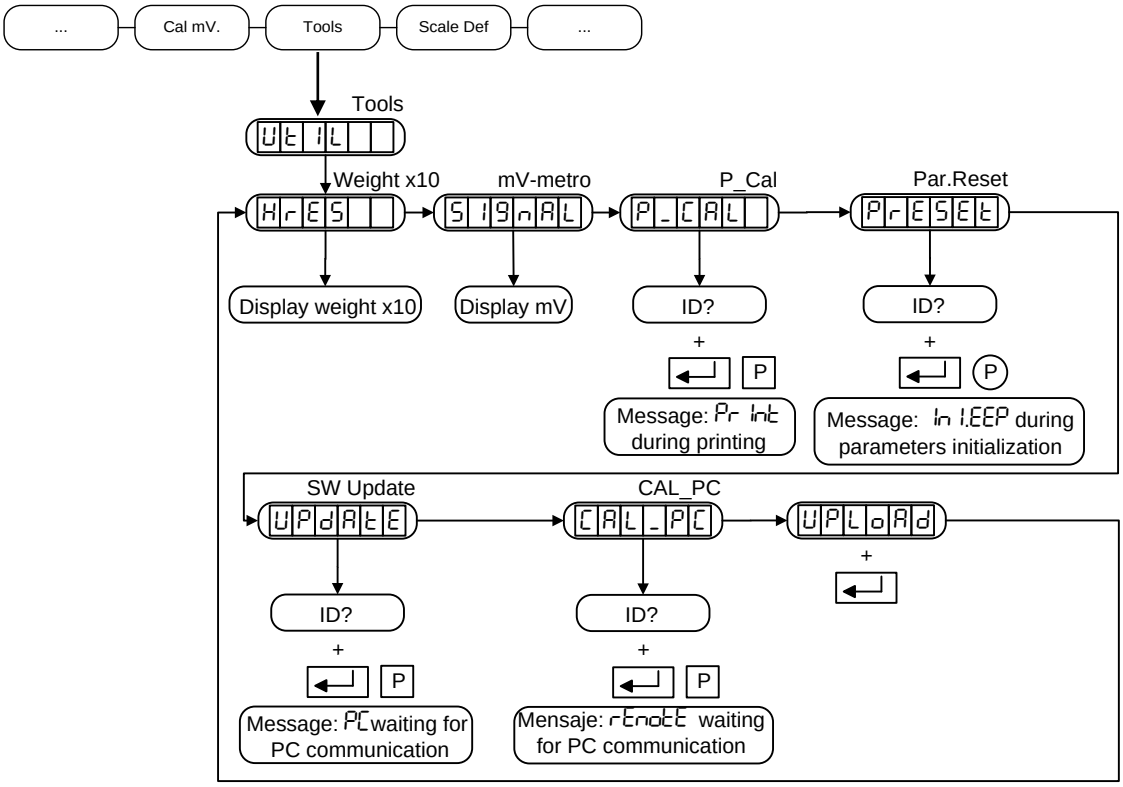

Figure 5.1 Tools

5.1 Weight x10 (H_rES)

Displays the weight value with a resolution multiplied by ten.

5.2 mV-Metro (SIGnAL)

Displays the ADC value output in mV.

5.3 Print Cal (P_CAL)

Allows the user to print the parameters through RS-232 port.

5.4 Par.Reset (PrESEt)

Resets all the parameters to the default configuration.

5.5 SW Update (UPdAtE)

Allows to upgrade the software via a PC program (SWIFT-PC Bootloader). You must have the calibration switch open and enter the PIN correctly so that the equipment is ready to communicate with the PC. To be able to upgrade the software, you must have the Calibration software seal open (see 3.1.2). If the device is not communicating and EXIT key is pressed, the computer restarts. Updating the software increase the number of calibrations on the indicator. If you want to start remote communication from a computer using the SWIFT-PC software, during linking process appears in the indicator display the message: "PC. CtrL". During the update appears: "LoAd. 1_" (if updated by the RS-485 port) or "LoAd. 2_" (if updated by the RS-232 port).

5.6 Remote Calibration (CAL_PC)

It allows the user to perform a remote calibration, through a PC program. It is necessary to place the right PIN number, afterwards, the device stays waiting the PC communication.

To modify metrological parameters, it is necessary that the calibration switch (see figure 3.1.1) unlocked, at the time of entering the configuration menu.

Changing these parameters will increase the calibration counter. If communication is not running and EXIT key is pressed, the device will restart.

5.7 Upload Software (UPLoAd)

It allows the user to perform a software upload to another device (p.e. for metrological verification).

The software is sent though the RS-232 serial using the configuration of the serial port.

During the upload, the display will show "UPLo.XX", where XX is the counter from 99 to 0.

The process can be aborted by pressing key 

.

6 Communications

The device has two serial communication ports:
One serial port RS-485 half-duplex and a second port RS-232.
The communication channel behavior is selected in paragraph 3.5 for RS-485 and in paragraph 3.6 for RS-232.

6.1 Communication general characteristics

The RS-232 port supports the communication formats shown in paragraph 6.2, the DAT400/DAT500 protocol (see 6.6) and MODBUS protocol (ASCII or RTU). The protocol selection is performed in paragraph 3.6.1.

The RS-485 port besides communication formats of paragraph 6.2, the DAT400/DAT500 protocol (see 6.6) and MODBUS protocol (ASCII or RTU), also supports net communication through simple format (see 6.4). The protocol selection is performed in paragraph 3.5.1.

6.2 General Characteristics of the Remote Controller

6.2.1 Remote Controller Commands

Operation Commands:

A<CR>	Weight query in F4 format
G<CR>	Equivalent to EXIT + TARE keys
P<CR>	Weight query with response according to the selected format (see 3.5.3)
Q<CR>	Equivalent to PRINT key
R<CR>	Reset system
T<CR>	Equivalent to TARE key
Z<CR>	Equivalent to ZERO key
;CSW<CR>	Calibration software seal state query
;CNT<CR>	Number of calibrations query
;SR	Serial number query
;CV	Software version query
$	Weight query: The command does not require <CR>
STX, ENQ, ETX	Weight query: the command does not require <CR>
SYN	Weight query: the command does not require <CR> The query stays active until the weight is stable

SETPOINTS Programming: Allows changing VL(i) parameter from the i digital output(see 3.10.2).
The decimal point is taken from the system. In case of TYPE(i)=±REL o ±%REL: VL(i)=pppppp/100%.

Program:

S	P	i	±	p	p	p	p	p	p	p

Consult:

S	P	i	?

It returns the value in the programmed format.

Data transfer in ASCII format:

± :	Sign: + positive value; - negative value
i :	Digital output number (1 - 4)
p :	Weight (7 digits)

REMOTE Mode: It allows changing the i digital output, provided that this is programmed TYPE(i) = REM (see 3.10.3)

Act:

X	O	i	x

Consult:

X	O	?

Answer:

X	O	X_8	X_7	X_6	X_5	X_4	X_3	X_2	X_1

Data transfer in ASCII format:

i : Digital output number (1 - 4)

X_n : Status of the digital output (n): 0 = OFF; 1 = ON

Read digital inputs: It allows reading the status of the digital inputs

Consult:

X	I	?

Answer:

X	I	X_8	X_7	X_6	X_5	X_4	X_3	X_2	X_1

Data transfer in ASCII format:

X_n: Status of the digital input (n): 0 = Low; 1 = High

6.2.2 Data Format

F1 Format:

<STX>	POL	pppppppp	U	G/N	S	T

F2 Format:

‘’	POL	nnnnnnn	T

F3 Format:

<STX>	‘1’	‘ ‘	‘0’	‘ ’	POL	nnnnnnn	<ETX>	T

F4 Format:

POL	aaaaaaa	T

F5 Format:

<STX>	‘ ’	POL	nnnnnnn	<ETX>	T

F6 Format:

Used for a remote display. The content of the display is transmitted in hexadecimal.

D7	D6	D5	D4	D3	D2	D1	Status	T

Digit code:

bit 7: segment DP
bit 6: segment A
bit 5: segment B
bit 4: segment C
bit 3: segment D
bit 2: segment E
bit 1: segment F
bit 0: segment G

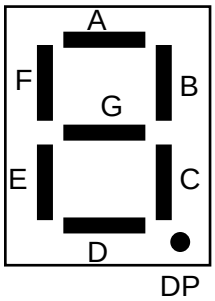

Status code:

bit 7: accumulation activated
bit 6: 0 fixed
bit 5: 0 fixed
bit 4: piece counting activated
bit 3: preset tare (PT)
bit 2: ZERO
bit 1: NET
bit 0: STABLE

F7 Format:

<STX>	status	POL	ppppppp	T

The status is obtained when you add to $0x20_{hex}$ the values of the lighted status LEDs:

Gross= $0x01_{hex}$ Zero= $0x08_{hex}$
Net= $0x02_{hex}$ Standstill=$0x20_{hex}$

F8 Format:

<STX>	POL	‘ ‘	ppppppp	‘ ‘	Unit	Unit	‘ ‘	Mode	Mode	‘ ‘	T

UNITS: kg = ‘KG’ MODE: Gross= ‘BR’
lb = ‘lb’ Net= ‘NT’

F9 Format:

ppppppp	T

F10 Format:

<STX>	<STA>	ppppppp	T

<STA>: status, 1 character: "+" positive weight
"-" negative weight
"?" unsteady weight

F11 Format:

<STX>	‘ ‘	‘ ‘	‘ ‘	Polarity	ppppppp	T

Polarity: "-" Negative weight
";" Zero or positive weight

F12 Format:

<STX>	<STA>	“ “	weight	T

<STA>: status, 1 character: "S" steady weight
"N" unsteady weight
Weight: without decimal point → 6 digits
with decimal point → 7 digits

F13 Format:

<STX>	“ “	<STA>	weight	T

<STA>: status, 1 character: "S" steady weight
"N" unsteady weight
Weight: without decimal point → 5 digits
with decimal point → 6 digits

F15 Format:

<STX>	<STA>	<net>	<gross>	<P>	<ETX>	<chksum>	<EOT>	T

<STA>: status, 1 character: "S" steady weight
"M" unsteady weight
"O” overload
"E" error
<net>: net weight without decimal point →6 digits
<gross>: gross weight without decimal point →6 digits
<P>: peak weight without decimal point →6 digits
<chksum>: 2 ASCII characters, XOR of the status and the 18 weight digits, in ASCII format. **Example:** 29 decimal value=0x1D, characters send are ‘1’ and ‘D’
T: Termination configuration must to be nonE for compatibility with DAT. (For RS-485 see 3.5.7, for RS-232 see 3.6.7)
Note: - For negative values, is sent “-“ on the left
- Weight field is completed with zeroes on the left

Definitions			
<STX>	Start of Text (ASCII 2)		
<ETX>	End of Text (ASCII 3)		
<EOT>	End of Transmission (ASCII 4)		
<ENQ>	Enquire (ASCII 5)		
<SYN>	Synchronous Idle (ASCII 22)		
<CR>	Carriage Return (ASCII 13)		
<LF>	Line Feed (ASCII 10)		
‘ ‘	Space character		
‘0’	Character ‘0’		
‘1’	Character ‘1’		
ppppppp	Weight value, 7 characters		
nnnnnnn	Net weight value, 7 characters		
aaaaaaa	Analog/Digital converter filtered output, 7 characters		
POL	Polarity:	‘ ‘	Weight > 0
		‘-‘	Weight < 0
U	Units:	K	kg
		T	t
		G	g
		L	lb
		‘ ‘	oz, without unit
G/N	Gross/Net:	G	Gross
		N	Net
S	Status:	‘ ‘	Valid weight
		M	Motion
		O	Overload
		I	Invalid weight
T	Termination:	CR	
		CR + LF	
		ACK (ASCII 6)	
		NAK (ASCII 21)	

6.3 RS-232 Protocol

This is the communication between two pieces of equipment, point per point, with a maximum distance of 15 m.

Protocol format:

Command	CR

All commands in section 6.1.

6.4 Network Communications (RS-485)

This is the communication between several items of equipment (32 maximum) in a BUS with a maximum link distance of 1,200 m.

The SWIFT indicator can only be the SERVER and it must be assigned a unique address from 1 to 99.

Client queries and servers responses have the following formats:

Client query:

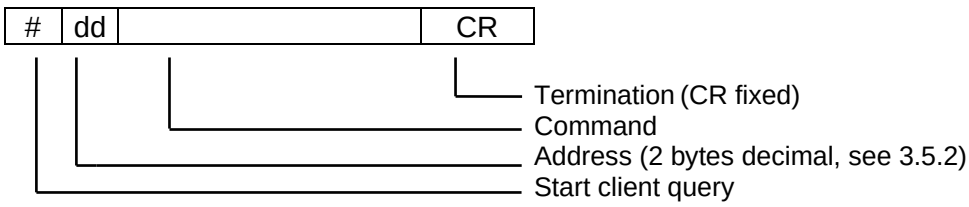

Server response:

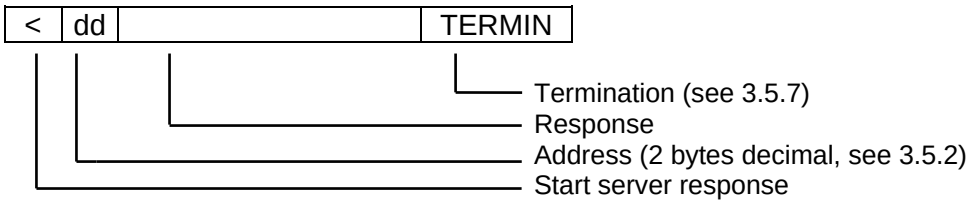

There are three types of responses:

Data	Received and responded query command
ACK	Received and understood command
NAK	Received but not understood command

6.5 MODBUS Protocol

6.5.1 General Characteristics

The MODBUS protocol that incorporates this device is based on the specifications of the guide "***MODBUS over serial line specification and implementation guide V1.02"*** published by the Modbus Organization (*www.modbus.org*).

This protocol allows interconnecting multiple devices (server) to a device (client); this client is able to interact individually with them through RS-485 channel. There are two different formats for MODBUS communication – ASCII and RTU- both supported for this device.

Although is possible to configure the two serial ports (RS-485 and RS-232) of the device in MODBUS protocol it's important to be aware that the commands are internally processed together, so keep in mind that the commands sent by one serial port can affect the other port. For example, if the command Tare (CMD_TARE) is sent through the RS-485 port and before the tare can be performed the Cancel (CMD_CANCEL) command is sent by the RS-232 port the Tare command will be canceled. Likewise if a command is currently executing from a port and is tried to execute another command simultaneously from the other port, the device will not accept the command indicating that it is busy. No problems happen when reading or writing records simultaneously from the two ports.

To activate the MODBUS protocol in the device, ASCII or RTU format in option TYPE (see 3.5 and 3.6) should be selected. Parameters baud rate and parity must be the same in the SWIFT as in all the others. It is also necessary to configure the bus address on each device to be able to identify each device in the bus (see 3.5.2 and 3.6.2)

6.5.2 MODBUS supported functions

Function	Description
01(0x01)	READ COILS
02(0x02)	READ DISCRETE INPUTS
03(0x03)	READ HOLDING REGISTER
04(0x04)	READ INPUT REGISTER
05(0x05)	WRITE SINGLE COIL
06(0x06)	WRITE SINGLE REGISTER
15(0x0F)	WRITE MULTIPLE COIL
16(0x10)	WRITE MULTIPLE REGISTER

Table 6.5.2.1

6.5.3 Warnings and saving parameters in the NVM (nonvolatile memory)

Many of the writing parameters are saved in NVM. This memory has limited writing cycles (typically 100.000), so we should avoid writing continuously on it.

In E2PROM column is indicated if a Holding Register is saved or not in the NVM. Set points (registers from 41010 to 41015) are saved directly when modifying. The rest of parameters only are saved in E2PROM when the correspondent command (the 32) is written in the command register (register 41001).When turning off the device, if the writing command is not executed the written value will not be stored, recovering the last stored value.

6.5.4 Parameters and variables addressing

The access and distribution to the parameters and variables in MODBUS registers is as follows:

1. The digital inputs reading are done by the command READ DISCRETE INPUTS. See table *Discrete inputs 6.5.10.3*.1.
2. The digital outputs state reading is done by the command READ COILS. See table *Coils* 6.5.10.4.
3. The digital outputs writing is done by the command WRITE SINGLE COIL or WRITE MULTIPLE COIL. See table *Coils* 6.5.10.4. To be able to write in a digital output is necessary to be configured as remote control (PC_Ctrl). See paragraph 3.10.3.
4. The only reading parameters or variables are read by the command READ INPUT REGISTER. See table *Input Registers 6.5.10.2*.1
5. The reading/writing parameters are read by the command READ HOLDING REGISTER and are written by the command WRITE SINGLE REGISTER and WRITE MULTIPLE REGISTER. See table *Holding Registers* 6.5.10.1.1. When writing a 32 bits variable, it is important to keep in mind that should be done by command WRITE MULTIPLE REGISTER because MODBUS single register has 16 bits.

6.5.5 Command Register

The command register (holding register 41001) is used to execute functions in the device. These functions can be tare, safe parameters in NVM, etc. In table 6.5.7.2 there the available commands are listed. The execution is performed by writing the correspondent code in this register. The PREFIXED TARE function needs writing the first tare value in command data register (addresses 41002, 41003). If for any reason, the command cannot be executed the system will give an error message.

6.5.6 Returned Error Codes

When the device receives a MODBUS command (correct address and checksum) answers with the data requested or with a status operation indication. When an error appears, answers with the following standard codes:

Error	Code	Possible causes
ILLEGAL FUNCTION	1	- Received function do not recognized by the device - Wrong received format command
ILLEGAL DATA ADDRESS	2	- No registers in this address - Intent to write in only read register - Intent to write in register only accessible in REMOTE mode - Intent to partial (one register) write in a 32 bits (two registers) variable
ILLEGAL DATA VALUE	3	- Wrong written value in a variable. - Example: out of range, not compatible with scale division, etc… - Written command do not recognized in command register (see 6.5.5)

SERVER DEVICE FAILURE	4	- Error when saving in NVM (nonvolatile memory). - Intent to write in a digital output not configured as remote mode (PC_Ctrl)
SERVER DEVICE BUSY	6	- At this moment the device cannot process the command

Table 6.5.6.1

6.5.7 Using the command register

Besides the reading and writing parameters and variables through the MODBUS registers, the user can execute actions in the device through the command register. We use the following registers.

Command Registers		
Address	**Description**	**Comments**
41001	Command Register	See table 6.5.7.2
41002	Command Data (H)	
41003	Command Data (L)	
41004	Status Command Register	Only read. See table 6.5.7.3

Table 6.5.7.1

The command register reading (41001) has the same answer as the status register (41004). Writing a code in the command register will cause an action according to the following table:

Available Commands	
Code	**Function**
1	Zeroing
2	Automatic Tare
3	Prefixed tare.(first of all write the tare value in the command register data)
6	Exit tare
7	Print (prints a ticket if RS-232 port is configured in ticket mode)
10	START: Start application check-weigher/Dosing
11	Close totalization
20	Modify software calibration seal. (First enter PIN and value in command data record - PIN on top) (4)
30	Reset device
32	Save in NVM (nonvolatile memory) the modified registers
40	Force Blind (Turn display off)
41	Exit Blind (Turn display on)
42	CheckWeigher mode TEST(3)
43	CheckWeigher mode NORMAL
100	Cancel (allows to cancel functions, if for any reason they stay in a state indefinitely because a non-stability or a load cell error)
101	Read name PROFINET device. (the name is copied in registers 49000…49119) (1)
102	Write name PROFINET device. (the name is copied from registers 49000…49119) (1) (2)

Table 6.5.7.2

(1) These commands are used to read or write the station non standard name from MODBUS. To accomplish this, we must use the RAM zone registers and these two commands.
To read the device name we need to send the command 101, when this command is executed we can read the name from registers 49000…49119.
To write the name of the PROFINET device, first we need to write the name on the registers 49000...49119 and then send the command 102 (in this case the device must be in remote mode).
(2) In order to use this command the device must to be inm remote mode.
(3) The activation of TEST mode is not saved in NVM. Restarting the indicator will remain in NORMAL mode.
(4) To modify calibration software seal, write the PIN code on register 41002, the desired state in register 41003 and execute command 20d.

During command 32 execution (save in NVM) the device response with error code 6 (SERVER DEVICE BUSY) to any MODBUS command.

When sending 1(zero), 2 (automatic tare) and 7 (print) commands, the device can take a while for executing them (i.e. non stable weight). During this time if we attempt to read the command status through 41001 or 41004 registers, we will get the correspondent code function and value 4 in status (executing command pending).

When a function is in 4 status (executing pending) is possible to send the Cancel command (code 100) to cancel it. When reading the status register command afterwards the cancel command has been sent we can have two different answers:

1. Cancel code function and status 2 (error): Indicates there is no executing pending function.
2. Function codes 1, 2 or 7 and status 8 (cancel command): Indicates corresponding function has been canceled**.**

Reading the status register (41004) we can tell if the command has been successfully executed. The read data format is as follows:

Status register reading (16 bits)		
High byte (8 bits)	**Low byte (8 bits)**	
Executing command code (according to table 6.5.7.2)	Status:	
	Value	**Command execution**
	1	Correct
	2	Error during execution
	4	Execution pending
	8	Cancelled command through executing cancel command (code 100)

Table 6.5.7.3

Command 3 (Prefixed Tare) needs a previous writing in data register (41002 and 41003). Is a 32 bits value, this value should be within the scales capacity and should be compatible with the scale division. If these conditions are not accomplished an error will be shown during the command execution.

Command 32 (save in NVM) saves the data in a nonvolatile memory. If this command is not sent, data will be lost when restarting the device. The writing in a nonvolatile memory is a slow process, during this time the device answer with the error SERVER DEVICE BUSY.

Executing commands 10 and 11 the Device can respond with an error in the following cases:

Command (decimal)	**Error returned**	**Cause**
10	ILLEGAL DATA VALUE (0x03)	- The Device is not in Check-weigher mode.
10	SLAVE DEVICE BUSY (0x06)	- Is not possible to Start a new weighings because there is one weighing in progress. - The Device is executin another command and is not possible to Start a new weighings.

11	ILLEGAL DATA VALUE (0x03)	- Ther are not any totalization open
11	SLAVE DEVICE BUSY (0x06)	- The devisce is weighings. Wait until it finish to close the totalization.

6.5.8 Numerical data format

Registers in MODBUS protocol has 16 bits size. To transmit the three basic numerical variables we use the following format:

Byte variables (8 bits):

16 bits Register	
MSB (Most significant byte)	**LSB (Low significant byte)**
0x00	Valor de la variable (8 bits)

Table 6.5.8.1

Integer variables (16 bits):

16 bits Register	
MSB (Most significant byte)	**LSB (Low significant byte)**
Variable (MSB)	Variable (LSB)

Table 6.5.8.2

Long variables (32 bits):
We use two registers: Assuming that we define the variable as four bytes numbered from 1 to 4 with 1 being the least significant would have the following format:

First register 16 bits	
MSB (Most significant byte)	**LSB (Low significant byte)**
4th Byte of the variable	3rd Byte of the variable

Table 6.5.8.3

Second register 16 bits	
MSB (Most significant byte)	**LSB (Low significant byte)**
2nd Bite of the variable	1st Bite of the variable

Table 6.5.8.4

6.5.9 MODBUS address conversion:

Data register tables have their addresses in standard Modbus format. To convert this address into the necessary message for the Modbus format, these operations should be done:

1. If the address of the table is lower than 1000 then you have to subtract 1 to send it to the device. Example: Digital output 1 access is through COIL 1, its address is 00001. The message should send the address 0.
2. If the address is higher than 1000 and has the following format 1xxxx, 3xxxx or 4xxxx, we have to delete the first digit and the remaining number should be subtract 1. This is the value to send. Example: To access to Command register 41001, we have to send 1000 address in decimal (03E8 hexadecimal).

6.5.10 Registers address tables

In these tables are indicated the addresses and the content of all the available registers.

In the first column you can find the address register and in the second and third column are the address converted to the required MODBUS command format, in hexadecimal and in decimal.

6.5.10.1 Holding Registers

These are read/write registers used to modify or consult parameters of the device. You can also execute functions through the command register.

Related function (decimal code function): READ HOLDING REGISTER (03), WRITE SINGLE REGISTER (06), WRITE MULTIPLE REGISTER (16)

Address Register	Address Hexa. Command	Address Decimal Command	Length (Words)	Description	Format	Values Range / Comments	E2PROM (10)
41001	03E8	1000	1	Command Register	Integer	See table 6.5.7.2 (1)	No
41002	03E9	1001	2	Command Data (H)	Long	See table 6.5.7.2	No
41003				Command Data (L)		See table 6.5.7.2	No
41004	03EB	1003	1	Status Register	Integer	Read only. See table "K"	No
				Setpoints			
41010	03F1	1009	2	Setpoint 1 (H)	Long	-CAP…CAP (2)	Yes (9)
41011				Setpoint 1 (L)			
41012	03F3	1011	2	Setpoint 2 (H)	Long	-CAP…CAP (2)	Yes (9)
41013				Setpoint 2 (L)			
41014	03F5	1013	2	Setpoint 3 (H)	Long	-CAP…CAP (2)	Yes (9)
41015				Setpoint 3 (L)			
41016	03F7	1015	2	Temporal Setpoint 1 (H)	Long	-CAP…CAP (2)	No
41017				Temporal Setpoint 1 (L)			
41018	03F9	1017	2	Temporal Setpoint 2 (H)	Long	-CAP…CAP (2)	No
41019				Temporal Setpoint 2 (L)			
41020	03FB	1019	2	Temporal Setpoint 3 (H)	Long	-CAP…CAP (2)	No
41021				Temporal Setpoint 3 (L)			
				RS-485 Menu (11)			
41040	040F	1039	1	Type	Byte	0:Off,1:dE,2:St, 4:ASCII,5:RTU, 6:DAT	Yes
41041	0410	1040	1	Format	Byte	0…13 (3)	Yes
41042	0411	1041	1	Baudrate	Byte	0…5 (4) See table "F"	Yes
41043	0412	1042	1	Parity	Byte	0…2 → 0:None, 1:Even, 2:Odd	Yes
41044	0413	1043	1	Ou. Rate	Byte	0…8 (5) See table "G"	Yes
41045	0414	1044	1	Termination	Byte	0…3 (6) See table "H"	Yes
41046	0415	1045	1	Protocol	Byte	0: None, 1: RS485	Yes
41047	0416	1046	1	Address	Byte	1…99	Yes
41048	0417	1047	1	Bus termination	Byte	0: R.Termination OFF 1: R.Termination ON	Yes
				RS-232 Menu (11)			
41050	0419	1049	1	Type	Byte	0:Off,1:dE,2:St,3:Ti,6:DAT	Yes
41051	041A	1050	1	Format	Byte	0…13 (3)	Yes
41052	041B	1051	1	Baudrate	Byte	0…5 (4) See table "F"	Yes
41053	041C	1052	1	Parity	Byte	0…2 → 0:None, 1:Even, 2:Odd	Yes
41054	041D	1053	1	Delay	Byte	0…8 (5) See table "G"	Yes
41055	041E	1054	1	Termination	Byte	0…3 (6) See table "H"	Yes
41056	041F	1055	1	Empty (13)	Byte		Yes
41057	0420	1056	1	Address	Byte	1..99	No
				A_Out Menu			
41060	0423	1059	1	Type	Byte	0:Gross 1:Net	Yes
41061	0424	1060	1	Output	Byte	0: 4-20mA, 1: 0-20mA, 2: 0-5V, 3: 0-10V	Yes
41062	0425	1061	1	Error	Byte	0:FULL, 1: HOLD, 2: MIN	Yes
41063	0426	1062	2	Aout_0 (H)	Long	0…CAP (2)	Yes
41064				Aout_0 (L)			Yes
41065	0428	1064	2	Aout_F (H)	Long	0…CAP (2)	Yes
41066				Aout_F (L)			Yes
41067	042A	1066	1	Aout.F0	Integer	0…0xFFFF	Yes
41068	042B	1067	1	Aout.FF	Integer	0…0xFFFF	Yes
				D_Out Menu			
				Digital Output 1			
41070	042D	1069	2	VL1 Setpoint 1 (H)	Long	-CAP…CAP (2)	Yes
41071				VL1 Setpoint 1 (L)			Yes
41072	042F	1071	1	Type 1	Byte	0…14 (7) See table "I"	Yes
41073	0430	1072	1	Rel 1	Byte	0…2 0:Setpoint 1 1:Setpoint 2 2:Setpoint 3	Yes
41074	0431	1073	1	Trip 1	Byte	0…3 (8) See table "J"	Yes
41075	0432	1074	2	Band 1 (H)	Long	0…CAP (2)	Yes
41076				Band 1 (L)			Yes

Address Register	Address Hexa. Command	Address Decimal Command	Length (Words)	Description	Format	Values Range / Comments	E2PROM (10)
41077	0434	1076	2	Hy 1 (H)	Long	0…CAP (2)	Yes
41078				Hy 1 (L)			Yes
41079	0436	1078	1	d_Loc 1	Byte	0:OFF, 1:ON	Yes
41080	0437	1079	1	Hold 1	Byte	0…200 200 equals to 20.0s	Yes
41081	0438	1080	1	Delay 1	Byte	0…200 200 equals to 20.0s	Yes
				Digital Output 2			
41090	0441	1089	2	VL2 Setpoint 2 (H)	Long	-CAP…CAP (2)	Yes
41091				VL2 Setpoint 2 (L)			Yes
41092	0443	1091	1	Type 2	Byte	0…15 (7) See table "I"	Yes
41093	0444	1092	1	Rel 2	Byte	0…2 0:Setpoint 1 1:Setpoint 2 2:Setpoint 3	Yes
41094	0445	1093	1	Trip 2	Byte	0…3 (8) See table "J"	Yes
41095	0446	1094	2	Band 2 (H)	Long	0…CAP (2)	Yes
41096				Band 2 (L)			Yes
41097	0448	1096	2	Hy 2 (H)	Long	0…CAP (2)	Yes
41098				Hy 2 (L)			Yes
41099	044A	1098	1	d_Loc 2	Byte	0:OFF, 1:ON	Yes
41100	044B	1099	1	Hold 2	Byte	0…200 200 equals to 20.0s	Yes
41101	044C	1100	1	Delay 2	Byte	0…200 200 equals to 20.0s	Yes
				Digital Output 3			
41110	0455	1109	2	VL3 Setpoint 3 (H)	Long	-CAP…CAP (2)	Yes
41111				VL3 Setpoint 3 (L)			Yes
41112	0457	1111	1	Type 3	Byte	0…15 (7) See table "I"	Yes
41113	0458	1112	1	Rel 3	Byte	0…2 0:Setpoint 1 1:Setpoint 2 2:Setpoint 3	Yes
41114	0459	1113	1	Trip 3	Byte	0…3 (8) See table "J"	Yes
41115	045A	1114	2	Band 3 (H)	Long	0…CAP (2)	Yes
41116				Band 3 (L)			Yes
41117	045C	1116	2	Hy 3 (H)	Long	0…CAP (2)	Yes
41118				Hy 3 (L)			Yes
41119	045E	1118	1	d_Loc 3	Byte	0:OFF, 1:ON	Yes
41120	045F	1119	1	Hold 3	Byte	0…200 200 equals to 20.0s	Yes
41121	0460	1120	1	Delay 3	Byte	0…200 200 equals to 20.0s	Yes
				D_In Menu			
				Digital Input 1			
41130	0469	1129	1	Type 1	Byte	0: OFF 1: TARE 2: CLR TARE 3: ZERO 4: PRINT 5: START 6: CLRTOTAL 7: APP	Yes
41131	046A	1130	1	Func 1	Byte	0: LOW 1: HIGH	Yes
				Digital Input 2			

Address Register	Address Hexa. Command	Address Decimal Command	Length (Words)	Description	Format	Values Range / Comments	E2PROM (10)
41135	046E	1134	1	Type 2	Byte	0: OFF 1: TARE 2: CLR TARE 3: ZERO 4: PRINT 5: START 6: CLRTOTAL 7: APP	Yes
41136	046F	1135	1	Func 2	Byte	0: LOW 1: HIGH	Yes
				Digital Input 3			
41140	0473	1139	1	Type 3	Byte	0: OFF 1: TARE 2: CLR TARE 3: ZERO 4: PRINT 5: START 6: CLRTOTAL 7: APP	Yes
41141	0474	1140	1	Func 3	Byte	0: LOW 1: HIGH	Yes
				Binary Mode Outputs			
41150	047D	1149	1	Binary mode status	Byte	0:OFF 1:ON (12)	No
41151	047E	1150	2	Setpoint 1 BINOUT (H)	Long	–CAP…CAP (1)	No
41152				Setpoint 1 BINOUT (L)			
41153	0480	1152	2	Setpoint 2 BINOUT (H)	Long	–CAP…CAP (1)	No
41154				Setpoint 2 BINOUT (L)			
41155	0482	1154	2	Setpoint 3 BINOUT (H)	Long	–CAP…CAP (1)	No
41156				Setpoint 3 BINOUT (L)			
41157	0484	1156	2	Setpoint 4 BINOUT (H)	Long	–CAP…CAP (1)	No
41158				Setpoint 4 BINOUT (L)			
41159	0486	1158	2	Setpoint 5 BINOUT (H)	Long	–CAP…CAP (1)	No
41160				Setpoint 5 BINOUT (L)			
41161	0488	1160	2	Setpoint 6 BINOUT (H)	Long	–CAP…CAP (1)	No
41162				Setpoint 6 BINOUT (L)			
41163	048A	1162	2	Setpoint 7 BINOUT (H)	Long	–CAP…CAP (1)	No
41164				Setpoint 7 BINOUT (L)			
				APPLI Menu			
41400	0577	1399	1	APP (Application)	Integer	0:None; 1:CHECK; 2: FILL	Yes
				Checkweigher Application			
41405	057C	1404	1	START	Byte	0:KEY;1:INP; 2:KEY.INP;3:NET	Yes
41406	057D	1405	2	TRIG	Long	1div. ≤ TRIG ≤ MAX	Yes
41407							Yes
41408	057F	1407	2	BAND	Long	1div. ≤ BAND ≤ MAX	Yes
41409							Yes
41410	0581	1409	1	T_DEL	Integer	0.000 … 50.000seconds	Yes
41411	0582	1410	1	T_ACC	Integer	0.000 … 50.000seconds	Yes
41412	0583	1411	1	T_DIS	Integer	0.000 … 50.000seconds	Yes
41413	0584	1412	1	CANCEL	Byte	0:OFF; 1:ON;	Yes
41414	0585	1413	1	TOTAL	Byte	0:OFF; 1:ON; 2:STORE	Yes
41415	0586	1414	1	PC	Byte	0:OFF; 1:RS232; 2:RS485; 3:BOTH	Yes
41416	0587	1415	1	FILTER	Byte	0...15 (17) See table “L”	Yes
				Aplicación Dosificación			
41430	0595	1429	1	TYPE		**0: Charge net** 1: Charge gross 2: Discharge	Si
41431	0596	1430	1	TRIGGER		**0:Key**, 1:Input, 2:Key or Input, 3:Auto.	Si
41432	0597	1431	2	START_TARE_L (L)		–CAP…CAP (2)	Si
41433	0598	1432		START_TARE_L (H)			Si

Address Register	Address Hexa. Command	Address Decimal Command	Length (Words)	Description	Format	Values Range / Comments	E2PROM (10)
41434	0599	1433	2	START_TARE_H (L)		–CAP…CAP (2)	Si
41435	059A	1434		START_TARE_H (H)			Si
41436	059B	1435	1	START_DELAY		0…655 (19)	Si
41437	059C	1436	1	INITIAL FUNCTION	Integer	**0:OFF**;1:TARE;2:CLEAR TARE;3:RELAY A; 4:RELAY_B	Si
41438	059D	1437	1	PARAMETER INITIAL FUNC.	Integer	1…655 (19) **Default:5**	Si
41439	059E	1438	1	DOSAGE SPEEDS	Integer	**0: 1 speed**; 1: 2 speeds	Si
41440	059F	1439	1	DOSAGE SEQUENCE	Integer	**0:ON**; 1:OFF	Si
41441	05A0	1440	1	ASK (TARGET)	Integer	0:NO**; 1:LAST**; 2:QUERY	Si
41442	05A1	1441	2	TARGET(L)	Long	–CAP…CAP (2)	Si
41443	05A2	1442		TARGET(H)			Si
41444	05A3	1443	2	FINE(L)	Long	–CAP…CAP (2)	Si
41445	05A4	1444		FINE(H)			Si
41446	05A3	1445	1	CONTROL DELAY 1	Integer	0…999 (20)	Si
41447	05A4	1446	1	CONTROL DELAY 2	Integer	0…999 (20)	Si
41448	05A5	1447	2	IN FLIGHT WEIGHT (L)	Long	0…CAPx10 (18)	Si
41449	05A6	1448		IN FLIGHT WEIGHT (H)			Si
41450	05A7	1449	1	IN FLIGHT CORRECTION	Integer	**0**…100	Si
41451	05A8	1450	2	IN FLIGHT LIMIT (L)	Long	0…CAP (2)	Si
41452	05A9	1451		IN FLIGHT LIMIT (H)			Si
41453	05AA	1452	1	LACKMAT_TIME (feed check)	Integer	**0**…65 (seconds)	Si
41454	05AB	1453	1	WAIT TIME (tiempo espera)	Integer	**0**…655 (19)	Si
41455	05AC	1454	1	ERROR TYPE	Integer	**0:WEIGHT**; 1:PERCENT	Si
41456	05AD	1455	2	ERROR POS (L)	Long	(21)	Si
41457	05AE	1456		ERROR POS (H)			Si
41458	05B0	1457	2	ERROR NEG (L)	Long	(21)	Si
41459	05B1	1458		ERROR NEG (H)			Si
41460	05B2	1459	1	END FUNCTION	Integer	**0:OFF**;1:TARE;2:CLEAR TARE;3:RELAY A; 4:RELAY_B	Si
41461	05B3	1460	1	PARAMETER END FUNCTION	Integer	1…655 (19) **Default:5**	Si
41462	05B4	1461	1	SEND PC AUTO	Integer	**0:OFF**; 1:RS232; 2:RS485; 3:BOTH	Si
41463	05B5	1462	1	END INDICATION	Integer	0…655 (19) **;Default: 20**	Si
41464	05B6	1463	1	COARSE RELAY	Integer	**0**…3 (22)	Si
41465	05B7	1464	1	FINE RELAY	Integer	**0**…3 (22)	Si
41466	05B8	1465	1	ACTIVE RELAY	Integer	**0**…3 (22)	Si
41467	05B9	1466	1	PAUSE RELAY	Integer	**0**…3 (22)	Si
41468	05BA	1467	1	ERROR RELAY	Integer	**0**…3 (22)	Si
41469	05BB	1468	1	A RELAY	Integer	**0**…3 (22)	Si
41470	05BC	1469	1	B RELAY	Integer	**0**…3 (22)	Si
41471	05BD	1470	1	START INPUT	Integer	**0**…3 (22)	Si
41472	05BE	1471	1	PAUSE INPUT	Integer	**0**…3 (22)	Si
41473	05BF	1472	1	CANCEL INPUT	Integer	**0**…3 (22)	Si
41474	05C0	1473	1	CONTINUE INPUT	Integer	**0**…3 (22)	Si
41475	05C1	1474	1	BLOCK INPUT	Integer	**0**…3 (22)	Si
PROFIBUS Menu							
43000	0BB7	2999	1	Add (dirección)	Byte	0…126 (14)(15)	Yes
PROFINET Menu							
43010	0BC1	3009	1	ACTIVE	Byte	0:ON,1:OFF (15)	Yes
43011	0BC2	3010	1	Standar Station Name	Byte	Write: 0…254 Read: 0…255 (16)	Yes
RAM Zone Registers							
49000	2327	8999	1		Integer		No
...							
49127	23A6	9126	1		Integer		No

Table 6.5.10.1.1

(1) Table 6.5.7.2 commands are executed writing the value in this register. Read this registers returns the operation status (same as register 41004)
(2) This value should be multiple to the digital division. The decimal point does not take into account. CAP is the scale capacity. This value cannot be lower than -99999 (display capacity).
(3) Refers to the 14 possible values 0…13 that correspond to F1 to F15 formats respectively (13=F15, F14 is not implemented).
(4) Refers to the 6 possible baud rate values 4800, 9600, 19200, 38400, 57600, 115200.
(5) Refers to the 9 possible values 1,5,10,25,50,75,150,300,600.
(6) Refers to the 4 possible values CRLF, CR, ETX, NONE.
(7) Refers to the 15 possible values. See table “I”
(8) Refers to the 4 possible values HIGH, LOW, INBAND, OUTBAND
(9) These values are directly saved in E2PROM, without sending command through the command register
(10) In the column are indicated if the register is saved in E2PROM. The register is saved after written command 32 in the command register, except the set points that are saved directly when writing the registers.
(11) Parameter’s changes in serial ports are effective after reset the device. So, it is mandatory, to send the E2PROM records command to not lose any changes.
(12) When the register 41150 (Binary mode status) is set to 1, digital outputs acts in binary mode and disable the D_OUT menu configuration.
(13) An empty register can be read or write but his content doesn’t affect to the performance of the program. It’s recommended to not write in this register due to this refister will be used in future upgrades.
(14)If address 126 is programmed in POROFIBUS interface it allows to modify the address from the bus.
(15) A reboot of the field bus module is needed to take effect of changes in this parameter.
(16) If the register value is 255, it means that the name of the PROFINET device is not standard and must to be read through command register (command 101).
(17) Refers to the 16 possible values for filter: 0FF-2-4-6-8-10-12-14-15-16-17-18-19-20-22-24.
(18) This value is entered x 10 (without taking into account the decimal point). Maximum value: capacity x 10. Ex: CAP = 6000 maximum value = 60000
(19) This value is set in tenths of a second, per example, 105 equals 10.5 seconds
(20) This value is set in hundredths of a second, per example, 650 equals 6.50 seconds
(21) This value represents a weight or a percentage based on the configuration of the ERROR TYPE parameter (41456). If it is weight, it is configured in the same units as those defined in the weighing system and the limit is the capacity of the scale. If percentage is configured with tenths resolution: the range is 0 ... 1000 which represents 0% to 100.0%.
(22) Digital output number. 0 indicates none (non assigned output).
(23) Digital input number. 0 indicates none (non assigned input).

Table "L" Code identification for parameter FILTER	
Code	**Baudrate**
0	OFF
1	2
2	4
3	6
4	8
5	10
6	12
7	14
8	15
9	16
10	17
11	18
12	19
13	20
14	22
15	24

Table 6.5.10.1.2

Table "K" Reading command status register (16 bits)	
High byte (8 bits)	Low byte (8 bits)
Executing command code (according to table command 6.5.7.2)	Status: **Value** — **Command execution** 1 — Correct 2 — Error during execution 4 — Execution pending 8 — Cancelled command through executing cancel command (code 100)

Table 6.5.10.1.3

While executing a command the device returns an error code 0x06 (SERVER DEVICE BUSY) to any client command.

Table "F" Code identification for Baudrate parameter	
Code	**Baudrate**
0	4800
1	9600
2	19200
3	38400
4	57600
5	115200

Table 6.5.10.1.4

Table "G" Code identification for Ou. Rate parameters (Transmission rate)	
Code	**Transmission rate**
0	1
1	5
2	10
3	25
4	50
5	75
6	150
7	300
8	600

Table 6.5.10.1.5

Table "H" Code identification for Termination parameters	
Code	**Termination**
0	CR LF
1	CR
2	ETX
3	NONE

Table 6.5.10.1.6

Table "I" Code identification for Type parameters in digital outputs

Code	Function
0	OFF
1	GROSS
2	NET
3	P_REL
4	N_REL
5	P_PREL
6	N_PREL
7	ZERO
8	ZERO NET
9	SS
10	INRANG
11	NEG
12	TARE
13	PRINT
14	PC_CTRL

Table 6.5.10.1.7

Table "J"	
Code identification for TRIP parameters in digital outputs	
Code	**TRIP**
0	HIGH
1	LOW
2	INBAND
3	OUTBAND

Table 6.5.10.1.8

6.5.10.2 Input Registers

Read only registers, to consult weight data or specific device data.
Related function (decimal code function): READ INPUT REGISTER (04)

Address Register	Address Hexa. Command	Address Decimal Command	Length (Words)	Description	Format	Read Data
30010	0009	9	2	Net weight (H)	Long	
30011				Net weight (L)		
30012	000B	11	2	Gross weight (H)	Long	
30013				Gross weight (L)		
30014	000D	13	2	Tare (H)	Long	
30015				Tare (L)		
30016	000F	15	1	Weight status	Byte	See table "A"
30017	0010	16	2	A/D converter internal counts (H)	Long	
30018				A/D converter internal counts (L)		
30019	0012	18	1	mV/V	Integer	(1)
30020	0013	19	1	mV/V status	Byte	See table "B"
30021	0014	20	1	Analog output status	Integer	(2) See table "C"
30022	0015	21	1	Instrument “On-line”	Byte	
30023	0016	22	1	Digit display 1	Byte	See table "D"
30024	0017	23	1	Digit display 2	Byte	See table "D"
30025	0018	24	1	Digit display 3	Byte	See table "D"
30026	0019	25	1	Digit display 4	Byte	See table "D"
30027	001A	26	1	Digit display 5	Byte	See table "D"
30028	001B	27	1	Digit display 6	Byte	See table "D"
30029	001C	28	1	Display Led status	Integer	See table "E"
30030	001D	29	1	Software version "AB"	Integer	Software version "ABCDEFGH"
30031	001E	30	1	Software version "CD"	Integer	

Address Register	Address Hexa. Command	Address Decimal Command	Length (Words)	Description	Format	Read Data
30032	001F	31	1	Software version "EF"	Integer	ASCII code of every character. Example:"1.00204" H digit always is 0x00
30033	0020	32	1	Software version "GH"	Integer	
30034	0021	33	2	Serial number indicator (H)	Long	Serial Nº 0000000…9999999
30035				Serial number indicator (L)		
30036	0023	35	1	Number of callibrations	Integer	
30037	0024	36	1	Calibration software seal status	Byte	0: Open 1: Close (protected)
30040	0027	39	2	Checkweigher last weighing(H) (5)	Long	
30041				Checkweigher last weighing(L)		
30042	0029	41	1	Checkweigher status last weighing	Integer	0: Empty (no weighings made) 1: New weighing 2: Weighing accumulated 3: Error during weighing
30043	002A	42	1	Checkweigher status present weighing	Integer	0: Off (3) 1: Stay 2: Phase 1 (Wait) 3: Phase 2 (Accumulation) 4: Phase 3 (Display) 5:Error(Er.Ref)
30044	002B	43	1	Totalization status	Integer	0: Disabled(4) 1: Close 2: Open
30045	002C	44	1	Number of weighings totalized	Integer	
30046	002D	45	2	Present total weighing (H)	Long	
30047				Present total weighing (L)		
30048	002F	47	2	CheckWeigher: Last weighing x10 (H) (5)	Long	
30049				CheckWeigher: Last weighing x10 (L)		
30060	003B	59	2	Weight of last dosing (H) (9)	Long	
30061	003C	60		Weight of last dosing (L)		
30062	003D	61	2	Weight of last dosing x10 (H) (9)	Long	
30063	003E	62		Weight of last dosing x10 (L)		
30064	003F	63	1	Status of last dosing	Byte	see table "O" (11)
30065	0040	64	1	Status of current dosing	Byte	0: OFF (6) 1: OFFLINE 2: Rest 3: Pause 4: Error 5: Blocked 6: Ask for weight 7: Initial phase 8: Gross dosing 9: Fine dosing 10: Final phase 11: Indicating result 12: Waiting for stability 13: Canceling
30066	0041	65	1	Dosing Digital Output status	Integer	See table "M" (7)
30067	0042	66	1	Dosing Digital Input status	Integer	See table "N" (8)
30068	0043	67	1	Weight status	Byte	See table "A"
30069	0044	68	2	Current weight dosed (H) (10)	Long	
30070	0045	69		Current weight dosed (L)		
30071	0046	70	1	Dosing error code	Integer	See table "P" (12)

Table 6.5.10.2.1

(1) The mV/V is indicated in absolute value (without sign). In the status register, reg. 300020 the polarity is indicated. If the absolute value exceeds 65535 the Overflow bit of the status register is activated and remains fixed in 65535.
(2) The high byte indicates the state and the low byte indicates the output.
(3) Weighing status is OFF when the device is not configured as checkweigher.
(4) Totalization status is shown as 0 (disabled) if TOTAL parameter of the configuration is OFF.
(5) Is needed to read the weight status (register 30042) at the same time as the weight value in order to know if the weighing is valid.
(6) The status of the weighing is indicated as OFF when the indicator is not configured in dosing mode and OFFLINE when it is not in weighing mode.
(7) This register has the digital outputs of the dosing application assigned. See table "M" to see the assignment of each bit.
(8) This register has the digital inputs of the dosing application assigned. See table "N" to see the allocation of each bit.
(9) The weight of the last dosage. It is necessary to read the status of the weighing (record 30064) at the same time as the weight to know if it is valid.
(10) The indication of the dosed weight is only valid during the dosing process. When finished, this value is reseted.
(11) Indicates if the value is new and the status of the reading. The two parameters are coded with 4 bits per parameter as indicated in table "O".
(12) This error code is only valid if the status of the dosing (record 30065) is in error mode.

***Note:** To assure that the device and data read status correspond to each other, is necessary to read all involved registers in one MODBUS command, if not, is possible that some data may have been changed between reads. For example, the value of the last weighing (registers 30040 and 30041) may be read together with their status (register 30042) for corresponding information.

Table "A"			
Status register			
Bit	**Description**	**Meaning**	
		0	1
0	Weight Stable	No	Yes
1	Zero Indication	No	Yes
2	Tare Led	Off	On
3	Tare Led Preset	Off	On
4	Underload	No	Yes
5	Overload	No	Yes
6	Error Ref.	No	Yes
7	ADC error	No	Yes
8,9,10	Weight Decimal Point (3 bits)	-	-
11	Device “On-Line”	No	Yes
12	ADC Fault	No	Yes
13	LowBat	No	Yes
14	Reserved		
15	Reserved		

Table 6.5.10.2.2

Table "B"			
Indication mV/V, status register			
Bit	**Description**	**Meaning**	
		0	1
0	Sign	+	-
1	Overflow *	No	Yes
2	Error Ref.	No	Yes
3	ADC error	No	Yes

Table 6.5.10.2.3

*Overflow bit is activated when mV/V value is higher than 65535 or lower than -65535 to indicate the read value is wrong.

Table "C"			
Analog output status			
High Byte		**Low Byte**	
0x00	No error	0x00	4-20mA
		0x01	0-20mA
		0x02	0-5V
0xFF	Analog output not available	0x03	0-10V

Table 6.5.10.2.4

Table "D"

Corresponding digit segments to bits

	REGISTER DATA							
	D7	D6	D5	D4	D3	D2	D1	D0
Segment line	dp	a	b	c	d	e	f	g

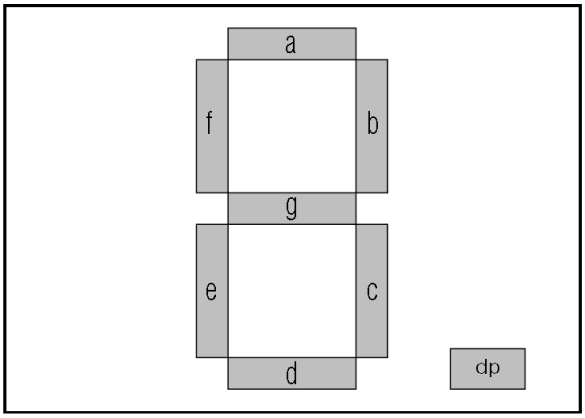

Table 6.5.10.2.5

Table "E"	
Correspondence bits- LED status	
Bit	**Indication**
0	PTare
1	Net
2	Zero
3	Stable
4	Out 1
5	Out 2
6	Out 3
7	In 1
8	In 2
9	In 3

Table 6.5.10.2.6

Table "M"	
Dosing Digital Output Status	
Bit	**Description**
0	Gross
1	Fine
2	Active
3	Pause
4	Error
5	Relay A
6	Relay B
7	*Reserved*
8	*Reserved*
9	*Reserved*
10	*Reserved*
11	*Reserved*
12	*Reserved*
13	*Reserved*
14	*Reserved*
15	*Reserved*

Table "N"	
Dosing Digital Input Status	
Bit	**Description**
0	Start
1	Pause
2	Cancell
3	Continue
4	*Block*
5	*Reserved*
6	*Reserved*
7	*Reserved*
8	*Reserved*
9	*Reserved*
10	*Reserved*
11	*Reserved*
12	*Reserved*
13	*Reserved*
14	*Reserved*
15	*Reserved*

Table "P"	
Códigod de error de la aplicación Dosificación	
Código	**Error**
0	No error
1	Final Weight too high
2	Final Weight too low
3	There is not enough material
4	Configuration error
5	Dosing out of margins
6	Lack of material
7	Scale error: signal > max range.
8	Scale error: signal < min range.
9	Scale error : Error Ref
10	Scale error : ADC error
11	Scale error : ADC Fault

Table "O"			
Status of last dosing			
Bits 4 to 7 (high nibble)		**Bits 0 to 3 (low nibble)**	
0	0: Empty (Haven't been made any weighings)	0	0: Empty (Haven't been made any weighings)
1	Correct weighing	1	1: New weighing
2	Weighing out of margins	2	2: Weighing read

Tablas 6.5.10.2.7

6.5.10.3 Discrete Inputs

Only read registers, to consult the status of the three digital inputs.
Related function (decimal code function): READ DISCRETE INPUTS (02)

Address Register	Address Hexa. Command.	Address Decimal Command	Description	Comment
10001	0000	0	Digital input 1	Status digital input 1
10002	0001	1	Digital input 2	Status digital input 2
10003	0002	2	Digital input 3	Status digital input 3

Table 6.5.10.3.1

6.5.10.4 Coils

Read/write registers to consult/modify the status of the three digital outputs.

A digital output only can be modified from MODBUS if it is configured (parameter Type) as remote mode (PC_CTRL).

Related functions (decimal code function): READ COILS (01), WRITE SINGLE COIL (05), WRITE MULTIPLE COIL (15).

Address Register	Address Hexa. Command	Address Decimal Command	Description	E2PROM	Comment
00001	0000	0	Digital output 1	NO	Read/write digital output 1
00002	0001	1	Digital output 2	NO	Read/write digital output 2
00003	0002	2	Digital output 3	NO	Read/write digital output 3

Table 6.5.10.4.1

6.5.11 Binary mode on digital outputs

Operating in binary mode, the three relays work together as a binary output of 3 bits to show 8 different levels controlled by net weight. These levels are controlled by 7 setpoints that can only be programmed and consulted through MODBUS. These setpoints are independent of the three setpoints VL(1), VL(2) and VL(3) of D_OUT configuration.

This mode can be activated or disabled by a register (Binary mode status) only accessible through MODBUS. These registers are reinitialized to zero every time the device is powered on (the value of the registers are not saved in E2PROM memory).

When the binary mode is activated, the D_OUT configuration is disabled and the outputs trigger according to net weight and the binary setpoints configuration (VLB(1)…VLB(7)) programmed in registries 41151 to 41164 on MODBUS as the following figure shows:

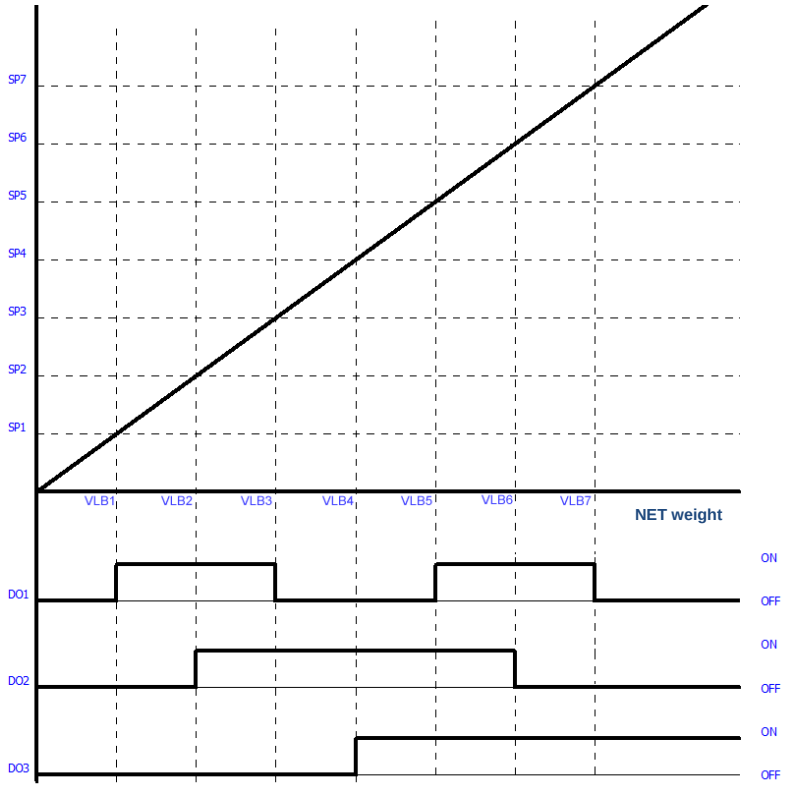

Figure 6.5.11.1 Responses of digital outputs in binary mode

VLB1…VLB7: are the values of net weight programmed as the 7 binary setpoints (MODBUS 41151 to 41164 registers) and must contain valid values in ascending order, it means VLB2 must to be higher than VLB1, and VLB3 must to be higher than VBL2, etc.

Digital outputs trigger according to the binary Gray code configuration: 000, 001, 011, 010, 110, 111, 101, 100. This configuration allows changing only one relay between one output and the next output.

The table 6.5.10.1.1 shows the 8 Holding Registers to control the relays in binary mode (Gray code).

None of these registers are saved on E2PROM memory. Restarting the device sets to zero all the 7 binary setpoints and the 41150 register (Binary mode status), so digital outputs start working in the standard mode configured in the D_OUT menu.

Trying to access to digital output configuration or pressing F▲ key while working in the binary mode, will show in the screen Err 3.

6.6 DAT400/DAT500 Compatibility Protocol

6.6.1 Commands

To use this protocol, serial port must to be configured as type DAT (tYPE: dAt)
This protocol corresponds to DAT SLAVE mode and has the follow commands:

Weight request:

Command:

<addr>	N	EOT

Response:

<addr>	N	<status>	<Net>	<Gross>	<Peak>	ETX	<chksum>	EOT

<addr>: Device address + 0x80(hexadecimal)
<chksum>: Is calculated through an XOR of N, status and the 18 bytes of weight

Program SP1 + SP2

Command:

<addr>	S	<S1>	<S2>	ETX	<chksum>	EOT

<S1>: SP1 value → 6 ASCII characters
<S2>: SP2 value → 6 ASCII characters
<chksum>: Is calculated through an XOR of S, S1 and S2

Response if the command is correct:

<addr>	S	ACK	EOT

In case of error:

<addr>	NAK	EOT

To determine if the command is correct is needed to check the following parameters:

- Correct checksum
- EOT character in the right position of the message
- S1 and S2 values corresponds with device division
- S1 and S2 values are not bigger than device MAX

Note:

- Setpoint values are not stored in NVM memory, after powering off the device, they will be lost.
- Limitation: It's only possible to program SP1 and SP2

Consult values SP1 + SP2

Command:

<addr>	R	EOT

Response:

<addr>	R	<S1>	<S2>	ETX	<chksum>	EOT

<S1>: SP1 value → 6 ASCII characters
<S2>: SP2 value → 6 ASCII characters
<chksum> … calculation XOR of R, S1 and S2

Store SP1 + SP2 in NVM

Command:

<addr>	M	EOT

Response:

<addr>	M	EOT

SP1 and SP2 values are stored in nonvolatile memory so when restarting the device the setpoint values will not be lost. It's important to be aware that the nonvolatile memory has a limit of writing cycles (1 million approximated) above that number of cycles the memory could stop working.

6.6.2 SWIFT configuration for DAT400/DAT500 compatibility:

DAT in slave mode:

- Select in rS-485 or rS-232: tYPE as dAt
- Configure address (Add), baudrate (bAUd) and parity (PAr)

ATTENTION: SWIFT doesn't have 2400 baudrate option

DAT in continuos mode:

- Selectr in rS-485 or rS-232: tYPE as St
- Configure termination (tEr) as nonE
- Configure address (Add), baudrate (bAUd) and parity (PAr)
- Configure format (For) as (F 15)

ATTENTION: SWIFT doesn't have 2400 baudrate option

6.7 Check-weigher communication protocol

- **CWI**<CR> : Starts weighing process (don't work if StArt: nEt)

  Response message:

  CWIA<TER>: ACK: Command accepted

  CWIN<TER>: NAK: Command not accepted

- **CWS**<CR> : Status Reading in check-weigher weighing mode

  Response message:

  CWS0<TER>: Off. Device is not in check-weigher mode.

  CWS1<TER>: Rest

  CWS2<TER>: Phase 1 (Waiting phase)

  CWS3<TER>: Phase 2 (Weighing reading phase)

  CWS4<TER>: Phase 3 (Display phase)

  CWS5<TER>: An error.

- **CWD**<CR> : Status and data Reading in totalization mode.

  Response message: **CWD**msennnnnttttttttt<TER>

  m: Status: totalization mode: yes/no (1 byte: 0x30 = no; 0x31= yes)

  s: Weighin status: 1 byte of 0x30…0x35. Same codification as command CWS.

  e: Totalization status: Close/Open (1 byte: 0x30=Close; 0x31= Open)

  n: Number of weighings (5 bytes)

  t: Totalized weight (9 bytes with decimal point included. If there is no decimal point the message is completed adding a zero '0')

- **CWR**<CR> : Last weighing read value.

  Response message: **CWR**Svvvvvvv<TER>

  S: Read Weight value: 0→Empty, 1→New,2→Read,3→Error

  vvvvvvv: Weight value. 7 digits included decimal point. If there is no decimal point the message is completed adding a zero '0'

- **CWC**<CR> : Close totalization.

  Response message:

  CWCA<TER>: ACK Correct response.

  CWCN0<TER>: NAK Device is not in totalization mode or there is not a totalization open.

  CWCN1<TER>**:** NAK Device is in weighing phase.

- **CWX**<CR> : Read last weighing with resolution x10.

  Response message: **CWX**Svvvvvvv<TER>

  S: Read Weight value: 0→Empty, 1→New,2→Read,3→Error

  vvvvvvv: Weight value. 7 digits included decimal point. If there is no decimal point the message is completed adding a zero ‘0’

6.8 Dosing communication protocol

- **DSC**KTTTTTTT<CR> : Sending command to control the process

  Response message:

  DSCA<TER>: ACK: Accepted command.

  DSCN<TER>: NAK: Non-Accepted command.

  Where:

  K: Is an ASCII character:

  I: Start the dosing cycle using the programmed target in the equipment configuration.

  P: Pause the dosage.

  S: Stop/Cancel

  C: Continue

  TTTTTTT: This parameter can only be sent when the command is "I" (start dosing) for the rest of the commands it must be omitted. Weight to dose in display units. 7 digits including the decimal point. If there is no decimal point the command should be completed with a zero '0'.

- **DSS**<CR> : Reading status dosing and error code.

  Response message:

  DSSFF**:**EE<TER>

  Where:

  The ":" symbol is a fixed separator that separates the FF and EE fields described below.

  FF: are two ASCII characters with a numerical value that indicate in which phase the dosing process is. The possible states are:

  00: OFF. The indicator is not in dosatge mode

  01: OFFLINE

  02: Rest

  03: Pause

  04: Error

  05: Block

  06: Ask for weight

  07: Initial phase

  08: Gross dosing

  09: Fine dosing

  10: Final phase

  11: Indicating result

  12: Waiting for stability

  13: Canceling

EE: Are two ASCII characters with a numeric value that indicate an error code. This code is only valid if the phase indicated in the **FF** field indicates that it is in error mode (code 04). The possible errors are the following:
00: No error
01: Final Weight too high (higher than MAX).
02: Weight to be dosed too low
03: Not enough material to dose (There is not enough material) comprovar con tabla
04: Configuration error.
05: Dosing out of margins.
06: Lack of material.
07: Scale error: signal > max range.
08: Scale error: signal < min range.
09: Scale error : Error Ref
10: Scale error : ADC Error
11: Scale error : ADC Fault

NOTE: Although the error code is always sent, it must only be taken into account when the dosing status indicates that it is in Error mode (code 04).

- **DSO**<CR> : Status of digital input/outputs for dosing

Response message:

DSOSSSSSSSS:IIIIIIII<TER>:

Where:

SSSSSSSS: These are eight ASCII characters that can be "0" or "1" and indicate the status of the digital outputs of the dosing. Each digit indicates a digital output. If we number the characters from 1 to 8 starting from the left (first character), the assignment is as follows::

Character number	Digital Output
1	Gross
2	Fine
3	Active
4	Paused
5	Error
6	Relay A
7	Relay B
8	Not usaded

NOTE: An output can be associated with a physical relay. In this case, this relay will be activated when the output is "1".

IIIIIIII: Are eight ASCII characters that can be "0" or "1" and indicate the status of the Dosing Digital Input. Each digit indicates an entry. If we number the characters from 1 to 8 starting from the left (first character), the assignment is as follows:

Character number	Digital Input
1	Start
2	Pause
3	Cancel
4	Continue
5	Block
6	Not used
7	Not used
8	Not used

NOTE: For a digital input to be activated, it must be associated with a physical input. When this physical input is activated, it will activate the corresponding entry.

- **DSR**<CR>: Reading of the last Weight dosed.

  Response message: **DSR**LSvvvvvvv<TER>

  L: Status: 0→Empty, 1→New, 2→Read

  S: Status Weight read: 0->Empty, 1->Correct, 2->Out of margin

  vvvvvvv: Weight value. 7 digits, decimal point included. If there is no decimal point the message is completed with a zero '0'.

- **DSX**<CR>: Reading of the last dosing value with resolution of x10

  Response message: **DSX**Svvvvvvvv<TER>

  L: Status: 0→Empty, 1→New, 2→Read

  S: Status Weight read: 0->Empty, 1->Correct, 2->Out of margin

  vvvvvvvv: Weight value. 8 digits, decimal point included. If there is no decimal point the message is completed with a zero '0'.

- **DSW**<CR>: Reading of the corrent dosed value. This command retorns the dosed Weight during the process.

  Response message:

  DSWN<TER>: NAK. Indicates that the indicator is not dosing.

  DSWSvvvvvvv<TER>

  S: Scale status.
  An ASCII character with the following meaning:

Character	ASCII code	Meaning
` ` *(space)*	32	Valid Weight
M	77	Non stable Weight
O	79	Overload
I	73	Non-valid weight

  vvvvvvv: Weight value. 7 digits, decimal point included. If there is no decimal point the message is completed with a zero '0'.

7 Connections

Shown below are the signal matching and connections, marked on the front panel of the device:

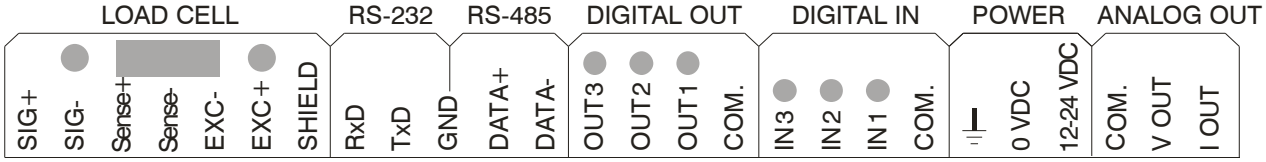

Figure 7.1 Connections matching for SWIFT RAIL version.

ANALOG OUTPUT			POWER			LOAD CELL						
I OUT	V OUT	COM	12-24VDC	0VDC		Shield	SIG+	SIG-	SENSE+	SENSE-	EXC-	EXC+
14	**15**	**16**	**17**	**18**	**19**	**20**	**21**	**22**	**23**	**24**	**25**	**26**

DIGITAL OUT				DIGITAL IN				RS-485		RS-232		
OUT3	OUT2	OUT1	COM.	INP3	INP2	INP1	COM.	DATA -	DATA +	GND	RxD	TxD
1	**2**	**3**	**4**	**5**	**6**	**7**	**8**	**9**	**10**	**11**	**12**	**13**

Figure 7.2 Connections matching for SWIFT PANEL version.

7.1 Load cell connection

SWIFT RAIL	SWIFT PANEL	UTILCELL Cell Wire Colour
SIG+	21	Red
SIG-	22	White
SENSE+	23	Blue
SENSE-	24	Yellow
EXC-	25	Black
EXC+	26	Green
SHIELD	20	Shield

Table 7.1.1 6-wire connection load cell

In case of using 4-wire connection cable, a bridge between EXC+ to SENSE+ and EXC- to SENSE- should be made.

SWIFT RAIL	SWIFT PANEL	UTILCELL Cell Wire Colour
SIG+	21	Red
SIG-	22	White
SENSE+	23	bridge to EXC+
SENSE-	24	bridge to EXC-
EXC-	25	Black
EXC+	26	Green
SHIELD	20	Shield

Table 7.1.2 4-wires connection load cell

7.2 Load cell sealing

In case of SWIFT RAIL version, the sealing of the load cell connection, should be done by using a transparent plastic plate that avoids the possibility to unscrew the connections once is installed. This plastic plate should be sealed through two screws, which fix the plate to the device.

In case of SWIFT PANEL version, the sealing of the load cell connector (7 terminal connector, pin 20 to 26) is made by means of an autodestruible sticky label that sticks the connector to the indicator's panel box. The label should cover the screws of the connector to prevent disconnecting the load cell cable without breaking the sealing.

7.3 Serial port connection

RS-232: The communication between two point-to-point devices with a maximum link distance of 15m. GND signals of both devices should be connected to the same ground.

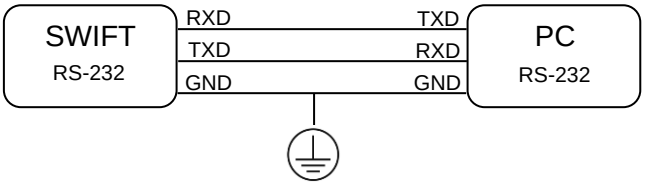

Table 7.3.1 Signal assignment on an RS-232 port

RS-485: The communication among several equipments (32 maximum) in a BUS with a maximum link distance of 1200 m. GND signals of both devicec should be connected to the same ground. When there are more than 2 devices and 20 meters of cable length is recommended to add, on the first and last device, a resistor of 120 Ω between DATA+ and DATA-. In some devices those DATA+ and DATA- signals can be labeled as A and B signals.

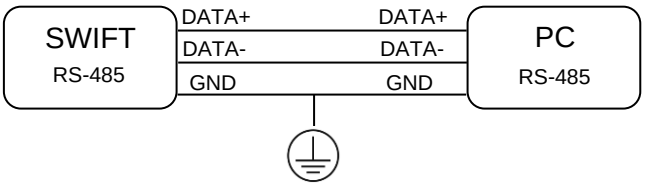

Table 7.3.2 Signal assignment in an RS-485 port

8 Appendix: Power supply accessory

8.1 Features:

Power supply 100 – 240V AC

- Universal AC input/Full range
- Protections: Short circuit / Overload / Over voltage
- Cooling by free air convection
- Can be installed on DIN rail TS-35/7,5 or 15
- Isolation class II
- LED indicator for power on
- No load power consumption<0,5W
- 100% full load burn-in test

8.2 General specifications

OUTPUT	DC VOLTAGE	24V
	RATED CURRENT	0,63A
	CURRENT RANGE	0 ~ 0,63A
	VOLTAGE ADJ RANGE	21,6 ~ 26,4V
	VOLTAGE TOLERANCE	± 1,0%

INPUT	VOLTAGE RANGE	85 ~264VAC 120 ~370VDC
	FRECUENCY RANGE	47 ~ 63 HZ
	AC CURRENT	0,88A/115VAC 0,48A/230VAC

ENVIRONMENT	WORKING TEMP	-20 ~ +60ºC
	WORKING HUMIDITY	20 ~ 90 % RH non condensing
	STORAGE TEMP. HUMIDITY	-40 ~ +85ºC, 10 ~ 95%RH
	TEMP. COEFFICIENT	±0,03 % / ºC (0 ~ 50ºC)
	VIBRATION	± 1,0%

SAFETY & EMC	SAFETY STANDARDS	UL609050-1, TUV EN609050-1 approved, design refer to EN50178
	WITHSTAND VOLTAGE	I/P-O/P:3KVAC
	ISOLATION RESISTANCE	I/P-O/P:100M Ohms / 500VDC / 25ºC / 70% RH
	EMC EMISSION	Compliance with EN55011, EN55022 (cispr22), EN61204-3 Class B, EN61000-3-2, -3
	EMC IMMUNITY	Compliance with EN61000-4-2, 3, 4, 5, 6, 8, 11, EN55024, EN61000-6-2, EN61204-3, heavy industry level, criteria A

OTHERS	MTBF	1172,3K hrs min. MIL-HDBK-217F (25ºC)
	DIMENSIONS	25 x 93 x 56 mm (W x H x D)
	TRANSPORT WEIGHT	0,1 KG

8.3 Conformity Declaration

MEAN WELL

CE

EC-Conformity Declaration

For the following equipment：

Product Name: Switching Power Supplies

Model Designation:DR-15-X (X=5,12,15,24)

is herewith confirmed to comply with the requirements set out in the Council Directive, the following standards were applied：

RoHS Directive (2011/65/EU)

Low Voltage Directive (2006/95/EC)：

EN60950-1:2006+A11+A1+A12 TUV certificate No：R50058736

Electromagnetic Compatibility Directive (2004/108/EC)：

EMI (Electro-Magnetic Interference)

Conducted emission / Radiated emission	EN55022:2006+A1:2007	Class B
	EN55011:2007+A2:2007 (Group 1)	Class B
	EN61000-6-3:2007	
Harmonic current	EN61000-3-2:2006	
Voltage flicker	EN61000-3-3:2008	

EMS (Electro-Magnetic Susceptibility)

EN55024:1998+A1:2001+A2:2003 EN61204-3:2000 EN61000-6-2:2005

ESD air	EN61000-4-2:2009	Level 3	8KV
ESD contact	EN61000-4-2:2009	Level 2	4KV
RF field susceptibility	EN61000-4-3:2006+A1:2008	Level 3	10V/m
EFT bursts	EN61000-4-4:2004	Level3	2KV/5KHz
Surge susceptibility	EN61000-4-5:2006	Level 4	2KV/Line-Line
Conducted susceptibility	EN61000-4-6:2009	Level 3	10V
Magnetic field immunity	EN61000-4-8:1993+A1:2001	Level 4	30A/m
Voltage dip, interruption	EN61000-4-11:2004	>95% dip 0.5 periods	30% dip 25 periods >95% interruptions 250 periods
Keyed carrier immunity	ENV50204:1995	Level 3	10V/m 900MHz

Note:
The power supply is considered as a component that will be operated in combination with final equipment. Since EMC performance will be affected by the complete installation, the final equipment manufacturers must re-qualify EMC Directive on the complete installation again.
For guidance on how to perform these EMC tests, please refer to TDF (Technical Documentation File).

This Declaration is effective from serial number EB2xxxxxxx

Person responsible for marking this declaration：

Mean Well Enterprises Co., Ltd.
(Manufacturer Name)

No.28, Wuquan 3rd Rd., Wugu Dist., New Taipei City 248, Taiwan (R.O.C.)
(Manufacturer Address)

Johnny Huang/Senior Verification Engineer：
(Name / Position) (Signature)

Ted Cheng/Product Manager：
(Name / Position) (Signature)

Taiwan
(Place)

Dec. 20, 2012
(Date)

Version：2

9 Appendix: Installation in protected area