SMART

WEIGHT INDICATOR

OPERATION AND CONFIGURATION MANUAL

Revision: Jan. 2019 (English)
For software versions: 1.51X

SMART
CALIBRATION RECORD

Record the calibration settings in the following table.

Serial Number:	
Model:	
Operating Voltage:	**230 V/50 Hz / 12VDC (optional for IP65)**
Purchase Date:	
Installation Date:	
Calibration Coefficients: ZERO: SPAN:	
Factory Access Code (ID):	**2802**
Personalized Access Code (ID):	

WARNING
Keep this number in a safe place. This will be the only one that will let you access the protected parameters (scale definition, calibration and others)

SAFETY PRECAUTIONS

	WARNING-SHOCK HAZARD For proper grounding, the power connector must only be mated with a three-wire grounded receptacle.
	WARNING-SHOCK HAZARD For proper grounding, the safety ground wire (green or green/yellow) must be connected to the general ground wire.
	WARNING-SHOCK HAZARD Due to the risk of electrical shock, this instrument must be installed only by qualified personnel.
	WARNING- SHOCK HAZARD Due to the risk of electrical shock, the cover must be removed only by qualified personnel.
	CAUTION Power is immediately applied when the power cord is plugged into a live receptacle.
	CAUTION Calibration and configuration must be performed only by qualified personnel.
	CAUTION Electrical shock hazard. Do not remove cover. Refer servicing to qualified personnel.
	CAUTION Risk of fire. Replace fuses with the proper spare.
	CAUTION The integrated circuits in the SMART are sensitive to electrostatic discharge (ESD). Be sure to follow proper procedures for transporting, storing and handling ESD-sensitive components.

INDEX

1 Introduction

1.1 Indicator Characteristics

1.1.1 Load Cell Connection

Full scale input signal	±3 mV/V
Input impedance	200 MΩ (typical)
Internal resolution	Converter AD 24 bits,16700000 counts (± 8350000)
Measurement rate	50 measurements per second
Linearity error	≤ 0.01 % of measurement level
Zero stability	150 nV/ºC max.
Span stability	3.5 ppm/ºC max.
Excitation voltage	6.1 ± 0.5 VDC
Transducer minimum resistance	85Ω (4 cellsx350Ω, 8 cellsx700Ω)
Transducer maximum resistance	1000 kΩ
Wire length	400 m/mm^2 max. (6 wires) 30 m/mm^2 max. (4 wires)
Input overload	± 12 V

1.1.2 Operator Interface

Main display	7 digit LED 20 mm
Keyboard	Keyboard with 6 keys

1.1.3 Serial Communications

Port Tx/Rx:	Bi-directional RS-232C
Optional	RS-485
Transmission rates	115200,57600,38400,19200,9600 and 4800 bauds
Number of bits and parity	8 bits no parity, 7 and 8 bits even parity and 7 and 8 bits odd parity

1.1.4 Input/Output Options

4 digital inputs	V_{ILOW} = 0.8V; V_{IHIGH} = 2V; V_{IMAX} = 30V
4 digital outputs	Open collector outputs; V_{OLOW} = 0.5V V_{OHIGH} = V_{EXT} – 1.2V; I_{ILOW} = 200mA (max) Range V_{EXT} = 5V – 24V
Analog output	Galvanic insulation output, 16-bits D/A Voltage output: 0 –10.2V (nom); load > 1kΩ Current output: 0 – 20.5mA; loop resistance<500 Ω

1.1.5 Power

Power supply	230 VAC ±10%, 50 Hz, 6 W max.
Fuse	250 V, 100 mA slow fusion
Alimentation DC (optional for IP65)	7.5V - 15VDC, nominal 12V. External fuse 500mA

1.1.6 Environmental and Mechanical

Operating temperature	-10ºC a 40ºC
Storage temperature	-25ºC a 70ºC
Size	282 x 158 x 71 mm (stainless steel version) 282 x 159 x 75.5 mm (ABS version)
Weight	1.85kg (stainless steel version) 1.1kg (ABS version)
Mounting	Bench mount or bracket

1.2 Keyboard

The keyboard is on the front side of the equipment and has 6 keys.

These are the main functions of these keys:

Keys	Normal status	Setup
EXIT	Exit any operation	Upwards
0	Zero the scale	To the left (Cursor)
T	Enter stored tare	To the right (Cursor)
	Piece counting	Increase one digit (Cursor)
Σ	Accumulation	Decrease one digit (Cursor)
	Print ticket	Confirm a value

1.3 Display and Luminous Information

The indicator consists of a main display and seven luminous indicators, as shown in figure 1.3.1.

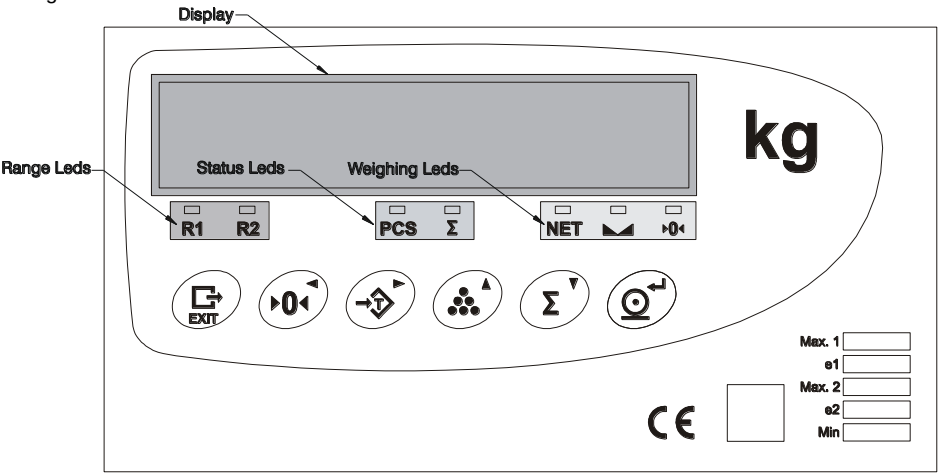

Figure 1.3.1 Display and luminous Information

1.3.1 Functions

Indicator	Meaning
NET	Tare
◣◢	Scale is in standstill mode
>0<	Zero
PCS	Pieces mode
Σ	Accumulation
R1/R2	Range situation

1.4 Label with characteristics and metrological identification

It is on the rear side of the indicator, as shown in figure 1.4.1. It is a safety label which contains the characteristics of the device, and metrological values and marks.

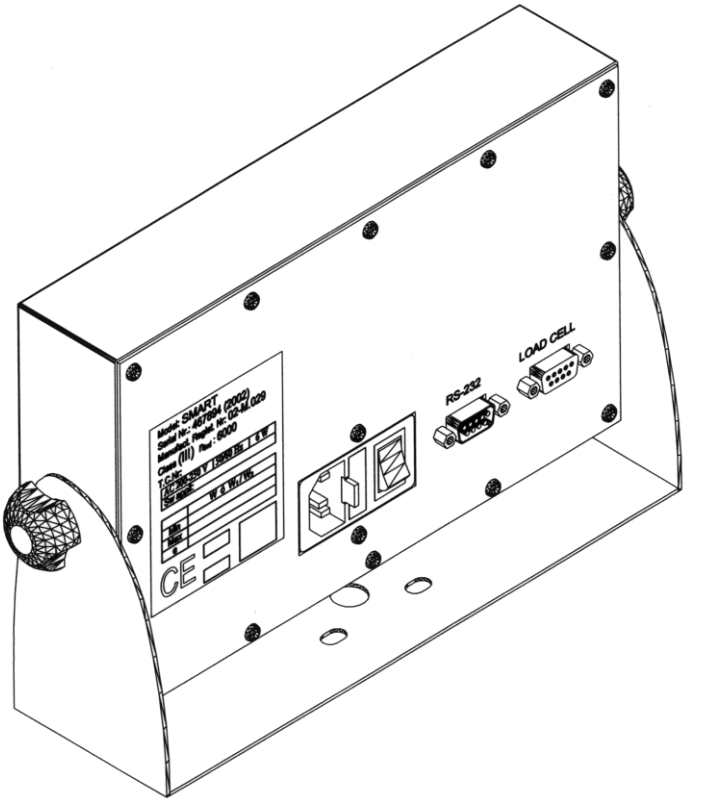

Figure 1.4.1 Label with characteristics and metrological identification layout

1.5 Error Messages

Main display	Condition	Solution
Err 0	Scale is not empty	Remove the weight
Err 1	EEPROM failure	Contact your technical service
Err 2	Data memory failure	Contact your technical service
Err_rEF	Sense signal of the load cell is too low	Check load cell's connections. For 4 wire load cell, check connection of SENSE bridge (see 5.1)
AdC_Err	ADC error	Check connector and load cell cable
AdC_FAL	ADC failure	Contact your technical service
- - - - - - -	Weight exceeds maximum capacity. Enter signal exceeds the maximum range	Remove weight Check installation
_ _ _ _ _ _ _	Signal under minimum range	Check installation
Err Prn	Weight on the scale under the minimum weight	Put a weight above the minimum value (see 3.3.6)
ErrCAP	Not accomplished: $\frac{MAX}{DIV} \leq 100000$	Check that MAX value is correct Change DIV to acomplish the relation
Errd1	Not accomplished: $\frac{MAX}{DIV} \leq 100000$	Check that DIV value is correct Change MAX to acomplish the relation
ErrCAP1	Not accomplished: $\frac{MAX1}{DIV1} \leq 100000$	Check that MAX1 value is correct Change DIV1 to acomplish the relation
Errd11	Not accomplished: $\frac{MAX1}{DIV1} \leq 100000$	Check that DIV1 value is correct Change MAX1 to acomplish the relation
ErrCAP2	Not accomplished: $\frac{MAX2}{DIV2} \leq 100000$	Check that MAX2 value is correct Change DIV2 to acomplish the relation
Errd12	Not accomplished: $\frac{MAX2}{DIV2} \leq 100000$	Check that DIV2 value is correct Change MAX2 to acomplish the relation
ErrC1=0 ErrC=0	Invalid zero value entered	Change zero value
Lo_bAt	Power failure	Check power supply
CAL_toP	The maximum number of calibrations has been reached	Contact your technical service
	Unplugged	Plug it
	Fuse has blown	Replace fuse
	Indicator failure	Contact your technical service

Err 63	Register not found	Inserted ID is not in the DSD memory
Err 64	Corrupted DSD resiter	The ID exists, but is corrupted
Err 65	Failure in DSD board	Harware error. Contact to your technical supplier
Err 66	Error reading DSD register	Contact to your technical supplier
Err 67	DSD memory full	Until the selected period of time expired to delete a register, will not be able to save a new operation
Err 68	Clock error	Clock board doesen't works or is not configured properly
Err	Error in the entered parameter	Appears this error when we edit the ID Ticket and put a number over 65535. Use a lower value
Err dSd	DSD board doesn't works	This message appears when you turn up the device, and the DSD board doesn't reacts. Contact to your technical supplier.

1.6 Informational messages

Display	Description	Information
UnProtE	Parameters/Menu in No-Protected mode	Correct password entry
L In ACt	Bi-rang linearity adjunstment activated	After doing the SPAN calibration, if the LIN paramenter is activated, the message will be shown few seconds
SEtdAtE SEtHoUr	The clock has to be configured	Automatic message when the clock is not properlly configured. Adjust the clock

1.7 Maintenance

1.7.1 Replacing Fuses

If displays do not appear when it is connected to power, the problem may be a defective ac power fuse. Replace the defective fuse as specified below.

a. Disconnect the indicator by pressing the rear switch and unplug the equipment from the electric outlet.
b. Disconnect the power cord from the rear side of the equipment.
c. Stainless steel version: Extract the fuse by pulling out the small tab of the fuseholder, which is in the rear side of the equipment.
   ABS version: Extract the fuse by unscrewing the fuseholder, which is in the rear side of the equipement.
d. Change the damaged fuse for a new one according to the specifications in 1.1.5.
e. Close the fuseholder and connect the equipment.

If the equipment is configured as IP65, replace the fuse as specified below.

a. Disconnect the indicator from the power plug.
b. Remove the rear cover by unscrewing the screws.
c. Remove the fuse protecting cover, which is in the power source.
d. Remove the fuse by pulling it out carefully.
e. Change the damaged fuse with a new one according to the specifications shown in 1.1.5, and reinstall the protecting cover.
f. Close the equipment and connect it.

WARNING- SHOCK HAZARD
Due to the risk of electrical shock, the cover must be removed only by qualified personnel.

1.7.2 Cleaning

a. Disconnect the indicator by pressing the rear switch and unplug the equipment from the electric outlet.
b. Clean the indicator with a clean and dry cloth.

CAUTION
- Never use alcohol or solvents to clean the indicator. These chemical products could damage it.
- Make sure that water does not enter the indicator. It could damage electronic components.

1.7.3 Rearmed EEPROM

In case the display shows Err 1 it indicates the EEPROM of the equipment is damaged. The equipment has an auto-rapair function to try to recover from this error.

To start the auto-repair it's needed to press EXIT → 0 and introduce the access code. At this point the equipment will try to repair the EEPROM. Once this process have finished, the equipment will restart.

If message Err 1 persists on the display, contact with tecnical service due to the EEPROM has an irrecoverable error.

In case of the equipment continues weighing, it means the EEPORM is recovered, but can be a loss on calibration parameters of the scale so it's necessary to check that weighing is correct.

2 Operation

2.1 Turning the indicator on

To turn the indicator on, you must connect the equipment to the power supply and activate the rear switch. The switch on sequence will first display a display test countdown sequence, then the software version, the equipment serial number, and finally the number of performed calibrations.

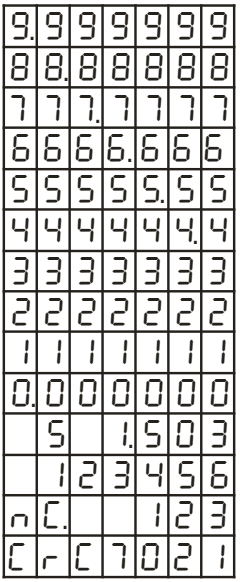

Figure 2.1.1 Switch on sequence

It would be better to stabilize the equipment for a while before using it, especially before a calibration. In this case it is advisable to wait for 30 minutes. The equipment may be permanently connected in order to avoid warm up time and potential condensations in case of significant changes in the outside temperature.

2.2 Entering Values

To use some of the equipment functions, it is necessary to introduce numerical values. Use the arrow keys to introduce these values. Use right and left arrow keys to position onto the digit to be modified, and the up and down arrow keys to increase or decrease its value.

2.3 Normal Weighing

When loading the platform, the measured weight is displayed on the display.

2.4 Zero

The indicator has a zeroing manual mechanism. When you press the Zero key the indicator stores the current weight value as the zero of the system.

This key acts depending of how we have defined the 0-top (see 3.2.13).

Operation:

2.5 Tare

2.5.1 Activate tare

Press the Tare key. The current value will be stored as tare. The NET led lights

Operation:

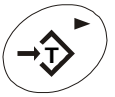

2.5.2 Clearing a Tare Value

To clear a tare register in normal operation, that is to say when auto clear tare option is oFF (see 3.3.3), press Exit and then the Tare key.

Operation:

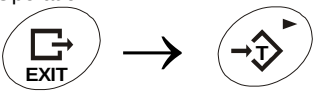

If auto clear tare is on then the tare is automatically deactivated if the conditions described on 3.3.3 are accomplished.

2.6 Ticket Printout

Press the Print key to print a ticket. If the weight is under the divisions introduced in PR MIN function (see 3.3.6), the auxiliary display shows

"Err Prn".

Operation:

Ticket ID:	1
Gross	100.0 kg
Tare	0.0 kg
Net	100.0 kg

Figure 2.6.1 Ticket example

2.7 Piece Counting

Place a certain number of pieces on the scale, press the Piece Counting key and enter the number of pieces on the scale. The PCS led lights. From now on the indicator displays the number of pieces.

Operation:

Press Exit and then the Piece Counting key to exit this function.

2.8 Accumulation

This function adds up various weights and gives the number of accumulated weights.

To add the weight that is on the scale into the sum press the Accumulation key.

In order to see the number of weighings, press again the Accumulation key before losing the stability. If you press this key again, the accumulated total will be displayed. If the piece counting function is activated, the sum of pieces is displayed.

Operation:

Record the current weight on the scale

Record the current weight on the scale and see the number of accumulated weighings

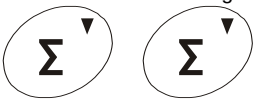

Record the current weight on the scale and see the total value accumulated

To leave this function press Exit, and then the accumulation key. The total accumulated and the number of weights will be set to zero.

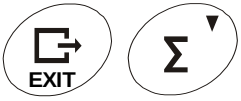

Each time we press Σ a ticket is being printed where is showed, for every keystroke, the number of weighing and its corresponding weight.

On leaving this function the total accumulated weight is printed.

Figure 2.8.1 shows a ticket example.

Ticket No.	2
1 -	100.0 kg
2 -	200.0 kg
3 -	300.0 kg
4 -	400.0 kg
5 -	500.0 kg
Total:	1500.0 kg

Figure 2.8.1 Ticket example

2.9 Animal-weigher/Check-weigher application

The animal-weigher/check-weigher application lets us make a three steps weighing process:

- Delay step
- Weight readings step (weighing gathering)
- Display and printing of results step

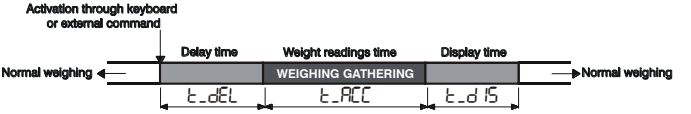

Figure 2.9.1 Setpoint

The process starts on pressing the key ↵ or Σ (or by means of an equivalent digital input or RS-232 command), depending on if a normal weighing with ticket printing or a totalization weighing process is desired. Once the process is activated the first step is a delay one that is maintained for the programmed time t_dEL, in which the indicator does not weight. Once ended, the second step starts and will last for the programmed time t_ACC, in which the indicator gathers weight readings (that are not displayed), to finally make a weight average of all the weight gathering period, that is printed or totalized. That average is displayed in the third step for the programmed time t_d IS (see 3.11). If an error accour, display will show Err_ACC and the weight result will be not calculated, those errors could be:

- When initializing the application the indicator status is oUEr- or UndErLoAd.
- During the application execution: LoU_bAt, Err_rEF, AdC_Err, AdC_FAL.

2.10 Setpoint

(Accessible menu only after having installed the digital output accessory)

Pressing the Exit and Tare keys at the same time you access the menu where you can introduce the weight with which the selected output operates.

Operation:

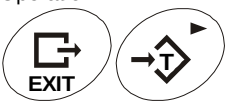

Inside the Value level we can find the parameters that are shown in the figure:

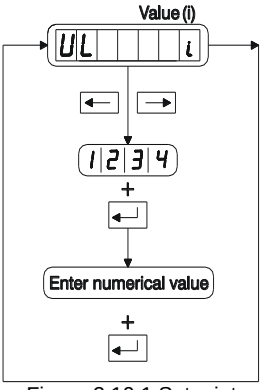

Figure 2.10.1 Setpoint

Use the key arrows to move through the menus. Press the Enter and Exit keys to change the level. If you want to modify a selected parameter, press the Enter key and introduce the new value with the up and down arrow keys (▲▼) or choose and option (◀▶), as appropiate. Press Enter to accept. Press Exit if you want to exit the menu without making any changes.

Exit:

When parameter d_LoC i is on then the message LoC (locked) will be shown and blink three times, this parameter can not be modified from this menu.

2.11 Communications

This equipment can have up to two serial communication port Tx/Rx: transmission and reception serial ports

The communication channel can be configured from the Configuration Menu (see 3.4).

A second transmission channel is available as an optional extra.

The performance of the second communication channel can be configured from the Configuration Menu (see 3.4 and 3.5).

2.11.1 General Characteristics of the Remote Controller

2.11.1.1 Remote Controller Commands

The equipment can be controlled through the RS-232 port. To carry out this function the indicator must be configured in 'DEMAND' mode (see 3.4.1).

Operation Commands:

A Query/Set weight in F4 format
G Equivalent to EXIT + TARE keys
P Query/Set weight with response according to the selected format (see 3.4.4)
Q Equivalent to PRINT key
R Reset system
T Equivalent to TARE key
Z Equivalent to ZERO key
S Equivalent to Σ key
E Equivalent to EXIT + Σ keys
$ Weight query/set: The command does not require <CR>
STX, ENQ, ETX Weight query: the command does not require <CR>
SYN Stable weight query. If weighing is not stable, waits until is stable to send
The command does not require <CR>

SETPOINTS Programming: It allows to change the VL(i) parameter from the i digital output (see 3.7.2).
The decimal point is taken from the system.
In case of TYPE(i) = ±REL o ±%REL: VL(i) = pppppp/100 %.

Program:

S	P	i	±	p	p	p	p	p	p	p

Consult:

S	P	i	?

It returns the value in the programmed format.

Data transfer in ASCII format:

± : Sign: + positive value; - negative value
i : Digital output number (1 - 4)
p : Weight (7 digits)

REMOTE Mode: It allows changing the i digital output, provided that this is programmed TYPE(i) = REM (see 3.7.3)

Act:

X	O	i	x

Consult:

X	O	?

Answer:

X	O	0	0	0	0	X_4	X_3	X_2	X_1

Data transfer in ASCII format:

i : Digital output number (1 - 4)
x_n: Status of the digital output (n): 0 = OFF; 1 = ON

Read digital inputs: It allows reading the status of the digital inputs

Consult:

X	I	?

Answer:

X	I	0	0	0	0	X_1	X_2	X_3	X_4

Data transfer in ASCII format:

x_n: Status of the digital input (n): 0 = Low; 1 = High

Consult the number of weighings accumulated:

Command: SN
Answer: number of weighings
space + 7 digit ASCII ('0 '... '9')

` `	N	N	N	N	N	N	N

Consult the total weight accumulated;

Command: ST
Answer: Total weight accumulated
sign + 7 digits ASCII ('0 '... '9') without decimal point

+	P	P	P	P	P	P	P

Consult total weight and number of accumulated weighings

Command: SQ length 6 bytes

Answer: Total weight accumulated and number of weighings

Length 8 bytes
- 1st byte: **address** + offset (0x20)
example: equipment address = 12:
1st byte value = 12 + 32 = 44 (symbol ASCII: ‘,’)
- 2nd, 3rd and 4th byte: **weight accumulated** in pseudo binary, offset = 0x20
example: totalized weight = 458901
2nd byte high-nibble = 4, low-nibble = 5:
byte value = 4*16 + 5 + offset = 64 + 5 + 32 = 101 (symbol ASCII: ‘A’)
3rd byte high-nibble = 8, low-nibble = 9:
byte value = 8*16 + 9 + offset = 128 + 9 + 32= 169 (symbol ASCII: ‘®’)
4th byte high-nibble = 0, low-nibble = 1:
byte value = 0*16 + 1 + offset = 33 (symbol ASCII: ‘!’)
- 5th, 6th and 7th byte: **number of totals** in pseudo-binary, offset = 0x20
example: totalized weight = 000005
5th byte high-nibble = 0, low-nibble = 0:
byte value = 0*16 + 0 + offset = 0 + 0 + 32 = 32 (symbol ASCII: ' ')
6th byte high-nibble = 0, low-nibble = 0:
byte value = 0*16 + 0 + offset = 0 + 0 + 32 = 32 (symbol ASCII: ' ')
7th byte high-nibble = 0, low-nibble = 1:
byte value = 0*16 + 5 + offset = 0 + 5 + 32 = 37 (symbol ASCII: '%')
- 8th byte: **end character** CR (0x0d, 13 decimal)

2.11.1.2 Data Format

F1 Format:

<STX>	POL	ppppppp	U	G/N	S	T

F2 Format:

‘’	POL	nnnnnnn	T

F3 Format:

<STX>	‘1’	‘ ‘	‘0’	‘ ’	POL	nnnnnnn	<ETX>	T

F4 Format:

POL	aaaaaaa	T

F5 Format:

<STX>	‘ ’	POL	nnnnnnn	<ETX>	T

F6 Format:
For UTILCELL remote display. The content of the display is transmited in hexadecimal.

D7	D6	D5	D4	D3	D2	D1	Status	T

Digit code:

bit 7: segment DP
bit 6: segment A
bit 5: segment B
bit 4: segment C
bit 3: segment D
bit 2: segment E
bit 1: segment F
bit 0: segment G

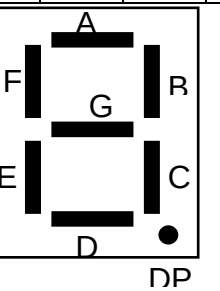

Status code:

bit 7: accumulation activated
bit 6: range 1 (R1)
bit 5: range 2 (R2)
bit 4: piece counting activated
bit 3: preset tare (PT)
bit 2: ZERO
bit 1: NET
bit 0: STABLE

Format F7:

<STX>	status	POL	ppppppp	T

The status is obtained when you add to $0x20_{hex}$ the values of the lighted status LEDs:

Gross= $0x01_{hex}$ Zero= $0x08_{hex}$
Net= $0x02_{hex}$ Standstill=$0x20_{hex}$

Format F8:

<STX>	POL	‘ ‘	ppppppp	‘ ‘	Unit	Unit	‘ ‘	Mode	Mode	‘ ‘	T

UNITS: kg = ‘KG’ lb = ‘lb’ MODE: Gross= ‘BR’ Net= ‘NT’

Format F9:

ppppppp	T

Format F10:

<STX>	<STA>	ppppppp	T

<STA>: status, 1 character: "+" positive weight
"-" negative weight
"?" unsteady weight

Format F11:

<STX>	‘ ‘	‘ ‘	‘ ‘	POL	ppppppp	T

Format F12:

<STX>	<STA>	“ “	weight	T

<STA>: status, 1 character: "S" steady weight
"N" unsteady weight
weight: without decimal point → 6 digits
with decimal point → 7 digits

Format F13:

<STX>	“ “	<STA>	weight	T

<STA>: status, 1 character: "S" steady weight
"N" unsteady weight
weight: without decimal point → 5 digits
with decimal point → 6 digits

Format F14:

-length 6 bytes
-1st byte: **address** + offset (0x20)
example: equipment address = 12:
1st byte value = 12 + 32 = 44 (symbol ASCII: ',')
-2nd byte: high-nibble of **total**, low-nibble **sign** + offset (0x20)
example 1: no totals = 0; positive weight = 1:
byte value = 0*16 + 1 + offset = 0 + 1 + 32 = 33 (symbol ASCII: '!')
example 2: there are totals = 1; nehative weight = 0:
byte value = 1 * 16 + 0 +offset = 16 + 0 + 32 = 48 (symbol ASCII: '0')
possible values:

Weight	Totals	2nd byte value
positive	no	0x21
positive	yes	0x31
negative	no	0x20
negative	yes	0x30

-3rd, 4th and 5th byte: **net weight** in pseudo binary, offset = 0x20
example: net weight = 009894
3º byte high-nibble = 0, low-nibble = 0:

byte value = 0*16 + 0 + offset = 0 + 0 + 32 = 32 (symbol ASCII: '0')
4º byte high-nibble = 9, low-nibble = 8:
byte value = 9*16 + 8 +offset = 144 + 8 + 32 = 184 (symbol ASCII: '©')
5º byte high-nibble = 9, low-nibble = 4:
byte value = 9*16 + 4 + offset = 144 + 4 + 32= 180 (symbol ASCII: '┤')
-6º byte: **end character** CR (0x0d, 13 decimal)

Definitions:

<STX>		Start of Text (ASCII 2)
<ETX>		End of Text (ASCII 3)
<ENQ>		Enquire (ASCII 5)
<SYN>		Synchronous Idle (ASCII 22)
<CR>		Carriage Return (ASCII 13)
<LF>		Line Feed (ASCII 10)
' '		Space character
'0'		Character '0'
'1'		Character '1'
ppppppp		Weight value, 7 characters
nnnnnnn		Net weight value, 7 characters
aaaaaaa		Analog/Digital converter filtered output, 7 characters
POL		Polarity:
	' '	Weight > 0
	'-'	Weight < 0
U	Units:	
	K	kg
	T	t
	G	g
	L	lb
	' '	oz, without unit
G/N	Gross/Net:	
	G	Gross
	N	Net
S	Status:	
	' '	Valid
	M	Motion
	O	Overload
	I	Invalid
T	Termination:	
	CR	
	CR + LF	
	ET + CR	
ACK	(ASCII 6)	
NAK	(ASCII 21)	

2.11.2 Protocol RS-232

Communication between two equipments, point per point, with a maximum distance of 15 m.
Protocol format:

Command	CR

All commands in section 2.11.1.1.

2.11.3 Network Communications (RS-485)

(For applications with the Input/Output accessory)

Communication between several equipments (100 maximum) in a BUS with a maximum link distance of 1,200 m.

The SMART indicator can only be the SLAVE and it must be assigned a unique address from 1 to 99.

Masters queries and slaves responses have the following formats:

Master query:

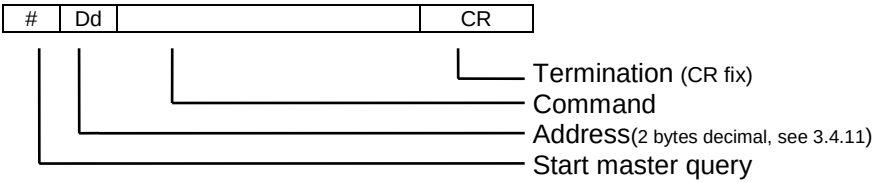

Slave response:

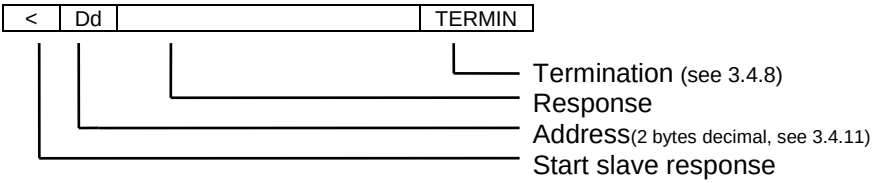

There are three types of responses:

Data	Received and responded query command
ACK	Received and understood command
NAK	Received but not understood command

2.12 Automatic operations RS-232 ports

When the option MODE (tYPE) of the RS-232 recepción/transmisión ports (Rx/Tx) are set as AUto, AUtot I or AUtoto (see sections 3.4 and 3.5) then the indicator is configured to carry out automatic operations in one of the ports or in both.

The values needed to configure for the automatic operations are tr 199Er (see sections 3.4.2 and 3.5.2) and bAnd (3.4.3 and 3.5.3).

The mode of operation can be seen in figure 2.12.1: the value of the net weight goes increasing until it arrives to target value of weight (tr 199Er) at time T1. Once the weight is superior to tr 199Er, there is stability and waiting time defined at dEL (3.4.7 and 3.5.7) has passed, the automatic operation will take place, and this happens at T2. Starting at T3 the weight passes below the value of tr 199Er but the automatic system won't be reactivated until: Net weigth ≤ last value sended -bAnd or Net weight ≤ bAnd. This happens at T4.

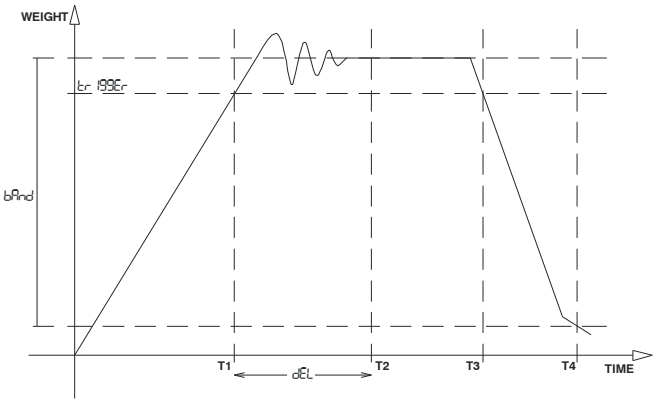

Figure 2.12.1 Automatic operations

2.13 Remote display

To operate the indicator as a Remote display, it should be activated in the equipment configuration (see 3.2.1). After activating the equipment, it will only operate as a remote display of another indicator, which should be connected according to the specifications in 5.10.

Configure the following parameters to establish a communication between the equipments:

Parameters	Indicator	Remote display	
FORMAT	Fixed at F6		See 3.4.4 and 3.5.4
BAUD RATE	Make values equal		See 3.4.5 and 3.5.5
PARITY	Fixed at 8n		See 3.4.6 and 3.5.6
DELAY	Fixed at 250ms		See 3.4.7 and 3.5.7
TERMIN	Fixed at CR		See 3.4.8 and 3.5.8
CONTROL	Fixed at OFF		See 3.4.9

Note: We should configure the indicator as a STREAM (St) mode (See 3.4.1). The indicator's configuration can be made in the serial port SEr IAL 1 (see 3.4), and SEr IAL2 (see 3.5).

If the communication is not successful, a line of segments will be displayed (- - - - - - -)

3 Configuration and Calibration

3.1 Introduction

Configuration and calibration modes have different parameters:
-Free access, they can always be read and modified.
-Protected, they can always be read but only modified under certain conditions (tagged with a Ⓟ in the diagrams).

Calibration and configuration modes can be activated by pressing the Exit key and zero key simultaneously. Then the indicator requests the access code (Id 0000). If you do not enter this code (and press Enter) or if you enter a wrong code, you access the menu but without permission to modify the protected parameters.

The access code can be modified (see 3.3.11). Its value can be consulted by means of printing the parameters. It is highly recommended to print the parameters after the process of calibration of the indicator and keep it with the eq uipment documentation.

It is possible to prevent mechanically the access to the protected parameters by means of the J202 jumper of the indicator main board. If A and B pins are bridged, the system is mechanically unprotected. If B and C pins are bridged, the system is mechanically protected.

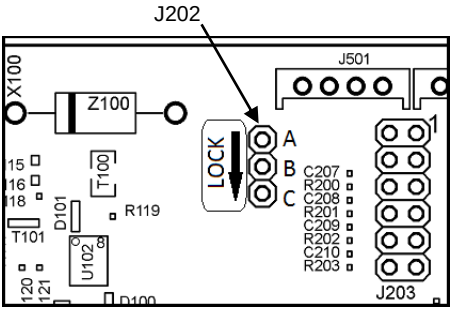

Figure 3.1.1 J202 Detail

If a protected parameter is changed, the new value is recorded. The indicator displays the number of calibrations made until then.

You will find the access code on page i.

Figure 3.1.2 shows the basic menu structure.

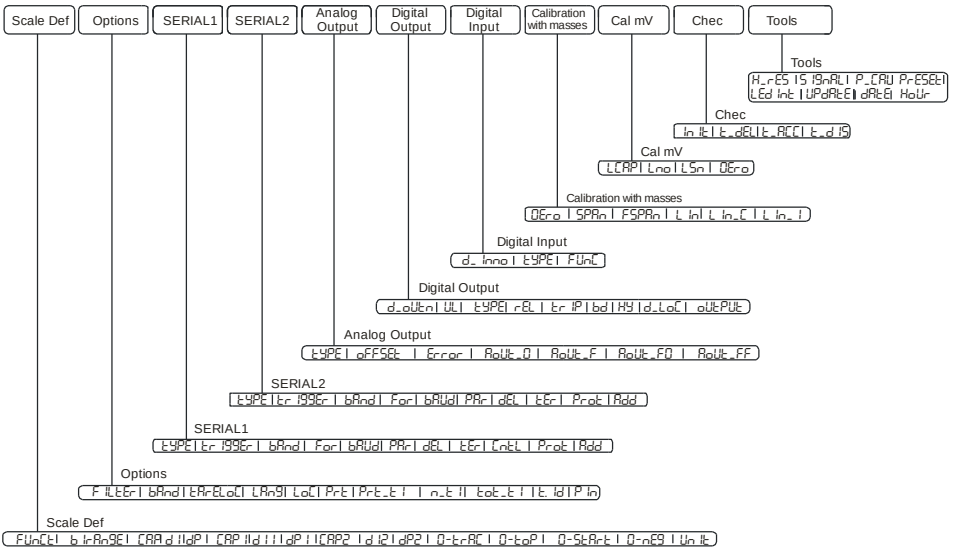

Figure 3.1.2 Basic Menu Structure

Within the calibration and configuration menu, the display shows your position.

Use the key arrows to move through the menus. Use the left and right arroy keys (◀ ▶) to move within the same level, and press the Enter and Exit keys to change the level. If you want to modify a selected parameter, press the Enter key and introduce the new value with the up and down arrow keys (▲ ▼) or choose and option (◀ ▶), as appropriate. Press Enter to accept. Press Exit if you want to exit the menu.

We recommend printing the calibration parameters after configuring the system using the P_cal function from the options submenu.

3.2 Scale Definition

Within the Scale Definition configuration level, parameters showed in Figure 3.2.1 can be found.

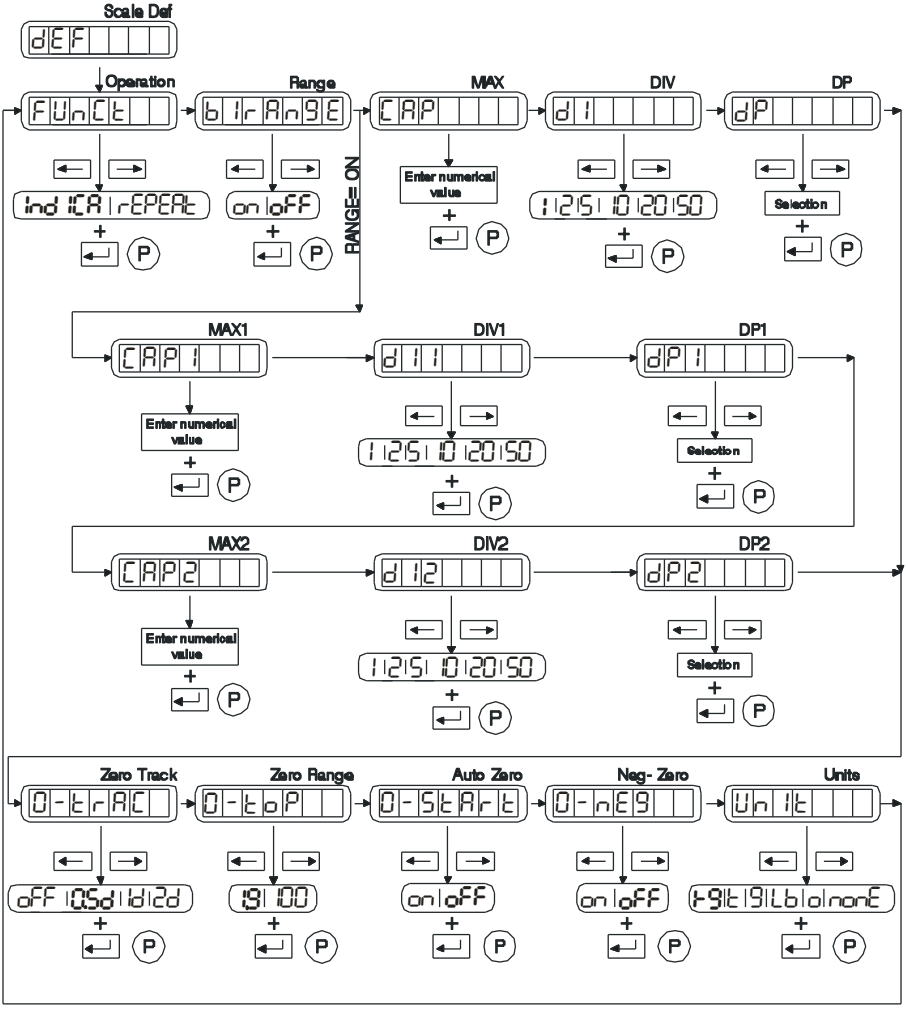

Figure 3.2.1 Scale Definition

3.2.1 Operation (FUnCt)

It selects the operation mode of the equipment.
These are the options:

Ind ICA:	Operation in the indicator modE
rEPEAt:	Operation in the remote display mode (See 2.13)

3.2.2 Range (b IrAn9E)

Activates the Multiple Ranges function. In ON position, the menu allows the access to MAX1, DIV1, DP1, MAX2, DIV2 and DP2 parameters, and MAX, DIV and DP2 disappear from the menu (see 3.2.1).

3.2.3 MAX (CAP)

Maximum capacity of the scale.

3.2.4 DIV (d I)

Value of the scale division.

3.2.5 DP (dP)

Position of the decimal point. By pressing the arrow keys you can move the decimal point to the desired position so that the division of the scale would be in the same unit than the capacity of the scale.

3.2.6 MAX1 (CAP I)

The capacity for Range 1.

3.2.7 DIV1 (d I I)

The Division for Range 1.

3.2.8 DP1 (dP I)

Position of the decimal point for Range 1. By pressing the arrow keys you can move the decimal point to the desired position so that the division for the Range 1 would be in the same unit than the capacity.

3.2.9 MAX2 (CAP2)

The capacity for Range 2 (=total capacity)

3.2.10 DIV2 (d I2)

The Division for Range 2. By pressing the arrow keys you can move the decimal point to the desired position so that the division for the Range 2 would be in the same unit than the capacity.

3.2.11 DP2 (dP2)

Position of the decimal point for Range 2.

3.2.12 ZERO TRACK (0-trAC)

The level at which the system is automatically zeroed as long as the weight is within the selected band.

These are the options:

OFF:	Deactivated function
0,5dd:	± 0.5 divisions
1dd:	± 1 division
2dd:	± 2 divisions

3.2.13 ZERO RANGE (0-toP)

The range within which the scale may be zeroed (→0← key and zero track).

These are the options:

1.9%:	Allows performing a zero if the weight value is ≤1.9% of the maximum capacity.
100%:	Allows performing a zero for the 100% of the maximum capacity.

3.2.14 AUTO ZERO (0-StArt)

The indicator zeroes when it is turned on.

These are the options:

on:	Activated function
off:	Deactivated function

3.2.15 NEG-ZERO(0-nEG)

These are the options:

off:	Deactivated function
on:	Activated function

If 0-toP: 1.9 the indicator goes to zero automatically when the weight value is negative, stable and less than 2% of calibration zero or zero start (0-StArt).

If 0-toP: 100 the indicator goes to zero automatically when the weight value is negative and stable.

3.2.16 UNITS (Unit)

Weight unit of the scale.

These are the options:

kg:	kilogram
t:	ton
g:	gram
Lb:	pound
o:	ounce
nonE:	none

3.3 Options

Within the Options configuration level, parameters showed in Figure 3.3.1 can be found.

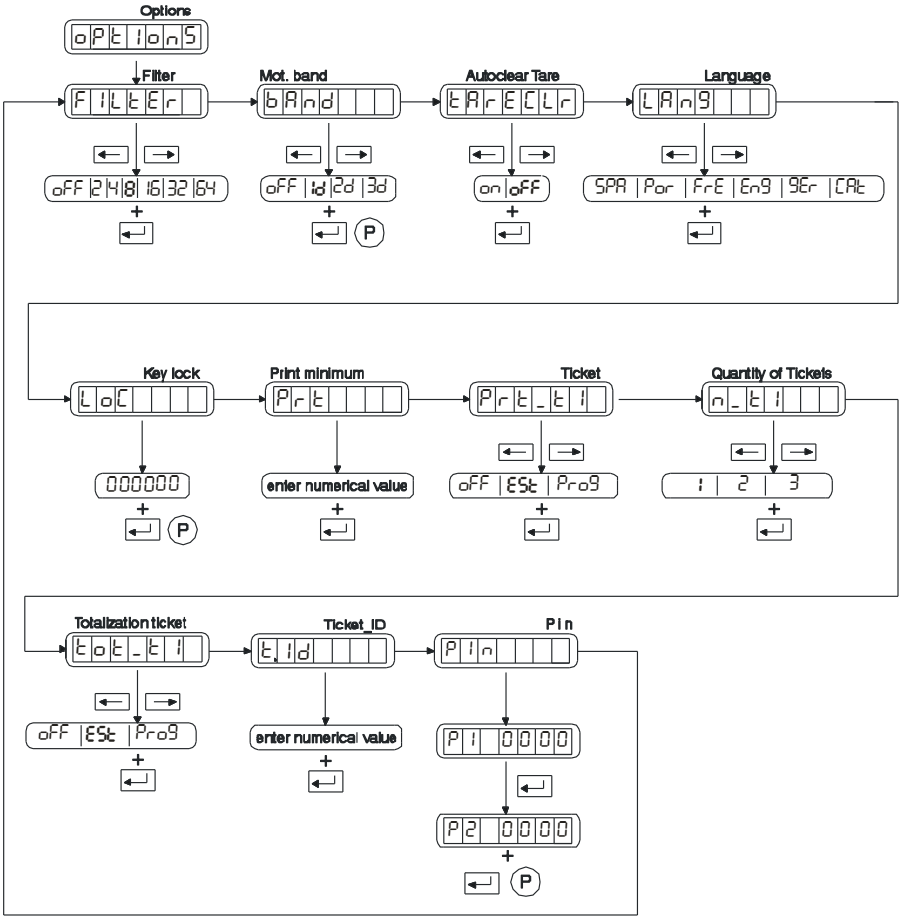

Figure 3.3.1 Options

3.3.1 FILTER (FILtEr)

Filter level. You can choose among different levels or deactivate this function. The higher is the selected value, the higher is the filter level.

These are the options:

off, 2, 4, 8, 16, 32, 64

3.3.2 MOT BAND (bAnd)

The level at which motion is detected. Out of this level there is no stability.
These are the options:

OFF:	Deactivate function
1dd:	One division
2dd:	Two divisions
3dd:	Three divisions

3.3.3 AUTOCLEAR TARE (tArECLr)

It allows removing the tare automatically.
The possible options are:
on, oFF

If that option is oFF the autoclear tare is deactivated. This is the equipment default option and under which the tare is activated until it is manually deactivated (see 2.5.2). When that option is on, the tare acts as follows: if after removing the weight its value is within the range of ¼ divisions around zero (cero LED is activated) then the equipment automatically deactivates the tare.

3.3.4 LANGUAGE(LAn9)

You can choose among different languages for the printed ticket.
The possible options are:

SPA:	Spanish
POR:	Portuguese
FRE:	French
ENG:	English
GER:	German
CAT:	Catalan

3.3.5 KEY LOCK (LoC)

Locks the keyboard. The parameter treatment is performed with a 6 digit binary number. The value 1 locks the function and the value 0 releases it.
These are the options:

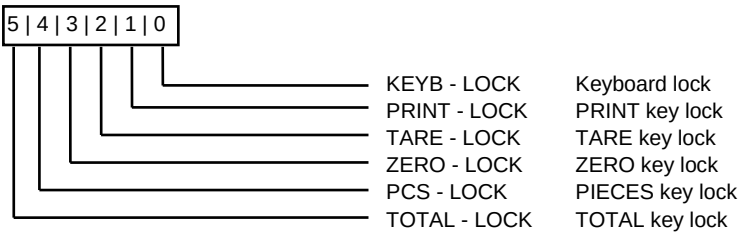

3.3.6 PRINT MIN (Prt)

Minimum weight value in divisions at which a print ticket request may be accepted. If the ticket cannot be printed "Err Prn" will be displayed.

3.3.7 TICKET(Prt_t 1)

Select the type of ticket to be printed with the Print key.
These are the options:

oFF:	No ticket printing
ESt:	Standard ticket
Prog:	Preset ticket

3.3.8 QUANTITY OF TICKETS (n_t 1)

Select the quantity of tickets to print.
During Printing the indicator will show -Pr Int-
These are the options: 1, 2, 3

3.3.9 TOTALIZATION TICKET (tot_t 1)

Select the type of ticket to be printed with the Accumulation key.
These are the options:

oFF:	No ticket printing
ESt:	Standard ticket
Prog:	Preset ticket

ATTENTION FOR PRESET TICKETS
From software versión 1.024 there are 7152 bytes to store tickets. Older versions the available memory is 3053 bytes. Keep in mind when creating format tickets to keep the printing files (***.prn**) or text files (***.txt**) below that value.
To transfer the preset tickets to the indicator will be necessary the SmartMatrix Ticket program.

3.3.10 TICKET_ID (t Id)

Edit the number of the next printing ticket. Up to 5 digits can be modified.

3.3.11 ACCESS CODE (P In)

With this option we can modify the access code value. The modified value has to be correctly introduced twice.

If the introduced values are different, the message P In_Err is showed and the process has to be begun from scratch.

WARNING
Keep this number in a safe place. This will be the only one that will let you access the protected parameters (scale definition, calibration and others)

3.4 Communication Port SERIAL 1

Within the configuration transmission port, the following parameters are shown:

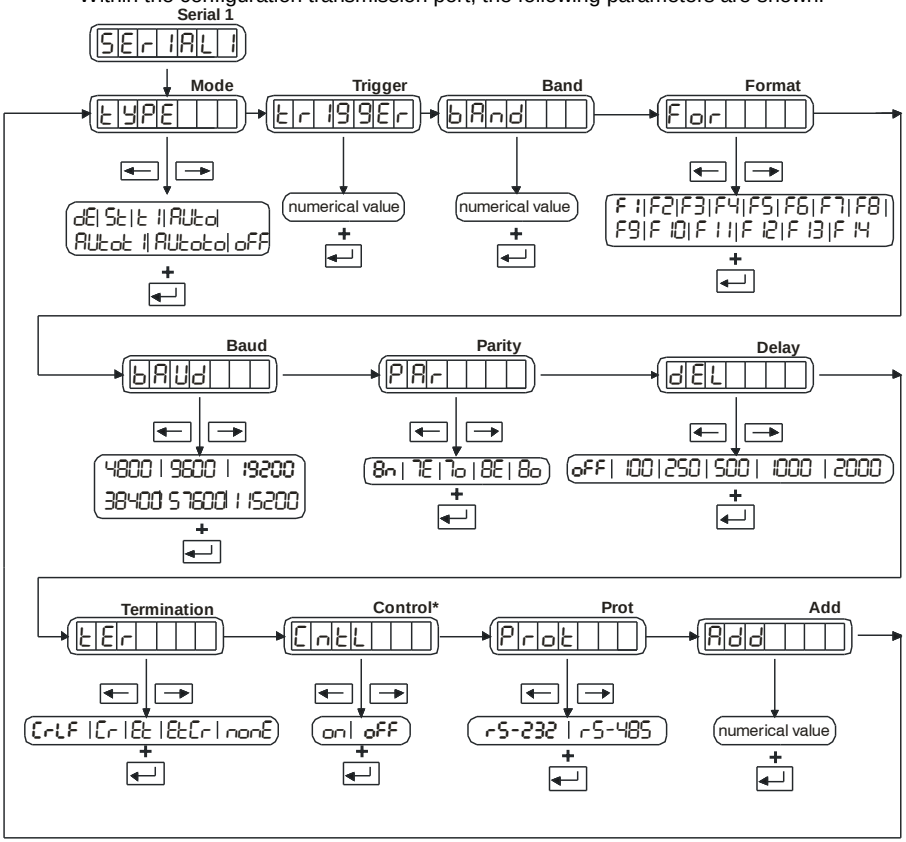

Figure 3.4.1 Communication port

3.4.1 MODE (tYPE)

Transmission mode.

These are the options:

DEMAND (dE):	Data transmission on external request through the serial port
STREAM (St):	Continuous data transmission
TICKET (t i):	On a print internal request (Print key)
AUTO (AUto):	It is automatically transmitted on acomplishing the condition for automatic operations on ports (see 2.12). The transmission format is the one specified in Format (see 3.4.4)

AUTO TICKET (AUtot i):	A ticket is automatically printed on acomplishing the º condition for automatic operations on ports(see 2.12).
AUTO TOTAL (AUtoto):	Totalizes automatically on acomplishing the condition for automatic operations on ports (see 2.12).
OFF (oFF):	Data transmission deactivated

3.4.2 TRIGGER (tr 199Er)

Only accessible if the options AUTO, AUTO TICKET and AUTO TOTAL are activated in the MODE parameter.

Numerical value to Start the process for AUTO, AUTO TICKET and AUTO TOTAL of the MODE parameter.Default value: **100**

3.4.3 BAND(bAnd)

Only accessible if the options AUTO, AUTO TICKET and AUTO TOTAL are activated in the MODE parameter.

It is the numerical value (relative to the last weight sent) which determines the process reload for the options AUTO, AUTO TICKET and AUTO TOTAL of the MODE parameter. Default value: **10**

3.4.4 FORMAT (For)

Format of transmitted data for DEMAND and STREAM.
These are the options:
F 1, F2, F3, F4, F5, F6, F7, F8, F9, F 10, F 11, F 12, F 13, F 14 (See 2.11.1.2)

3.4.5 BAUD (bAUd)

Transmission speed.
These are the options:
4800, 9600, 19200, 38400, 57600, 115200

3.4.6 PARITY (PAr)

Number of data bits and parity.
These are the options:

8-none:	8 bits data
7-even:	7 bits data, 1 bit even parity (even)
7-odd:	7 bits data, 1 bit odd parity (odd)
8-even:	8 bits data, 1 bit even parity (even)
8-odd:	8 bits data, 1 bit odd parity (odd)

3.4.7 DELAY (dEL)

It is the delay time from the request to the data transmission. If configured in STREAM mode, it is the delay time between the transmitted data.

These are the options:
oFF, 100ms, 250ms, 500ms, 1s, 2s

3.4.8 TERMINATION (tEr)

Termination of the data for DEMAND and STREAM.
These are the options:

CR+LF	<CR>,<LF>
CR	<CR>
ET	<ETX>
ET+CR	<ETX><CR>
NONE	NOTHING

3.4.9 CONTROL (CntL)

Control of the hardware flow (RTS signal of the RS-232-C protocol)
These are the options:

oFF:	DeactivAtEd FUnCt ion
on:	Activated function

3.4.10 PROT (Prot)

Communications protocol selection (see 2.11). If "**RS-232**" is selected, the Add parameter is forced to be "0".

3.4.11 ADD (Add)

Address of the equipment in a RS-485 network. It has to be "0" to operate as a RS-232 port.

3.5 Communication Port SERIAL 2

(Connector only available in SMART Multioption version)
Within the configuration transmission port, the following parameters are shown:

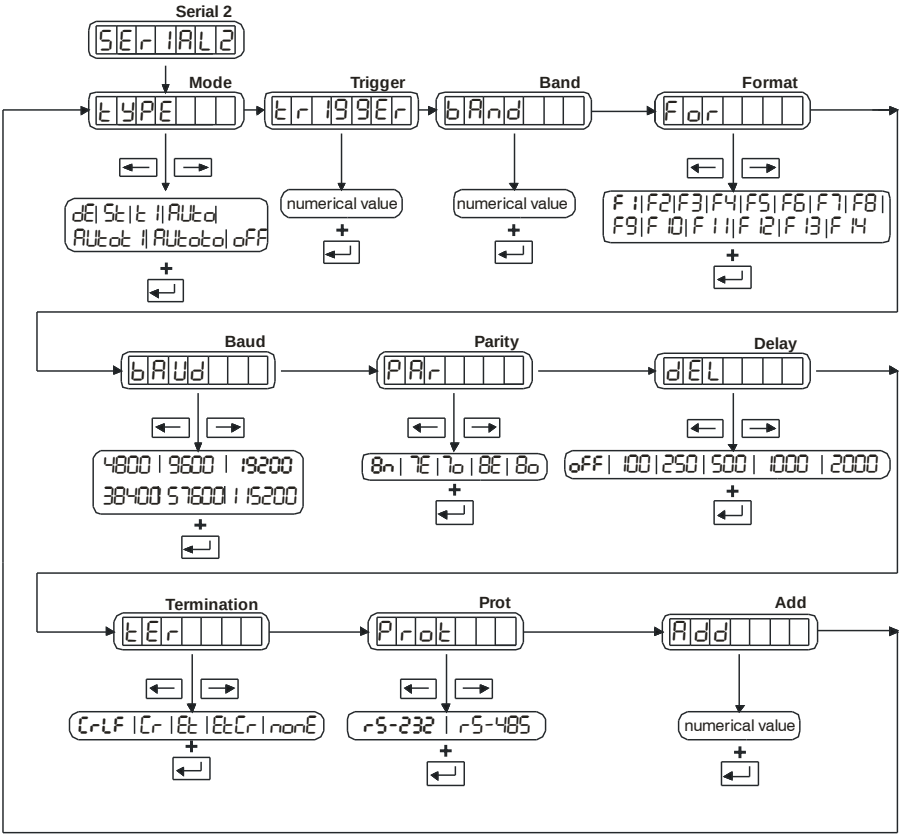

Figure 3.5.1 Transmission Port

3.5.1 MODE(tYPE)

Transmission mode. These are the options:

STREAM (St): Continuous data transmission

TICKET (t 1): Transmission on a print internal request (Print key)

AUTO (AUto): It is automatically transmitted on acomplishing the condition for automatic operations on ports (see 2.12). The transmission format is the one specified in Format (see 3.5.4)

AUTO TICKET (AUtot 1): A ticket is automatically printed on acomplishing the condition for automatic operations on ports (see 2.12).

AUTO TOTAL (AUtoto): Totalizes automatically on acomplishing the condition for automatic operations on ports (see 2.12).

OFF (oFF): Data transmission deactivated

3.5.2 TRIGGER (tr 199Er)

Only accessible if the options AUTO, AUTO TICKET and AUTO TOTAL are activated in the MODE parameter.

Numerical value to Start the process for AUTO, AUTO TICKET and AUTO TOTAL of the MODE parameter.Default value: **100**

3.5.3 BAND (bAnd)

Only accessible if the options AUTO, AUTO TICKET and AUTO TOTAL are activated in the MODE parameter.

It is the numerical value which determines the band of performance for the options AUTO, AUTO TICKET and AUTO TOTAL of the MODE parameter. Default value: **10**

3.5.4 FORMAT (For)

Format of transmitted data for STREAM.

These are the options:

F 1, F2, F3, F4, F5, F6, F7, F8, F9, F 10, F 11, F 12, F 13, F 14 (see 2.11.1.2)

3.5.5 BAUD (bAUd)

Transmission speed.

These are the options:

4800, 9600, 19200, 38400, 57600, 115200

3.5.6 PARITY (PAr)

Number of data bits and parity.

These are the options:

8-none:	8 bits data
7-even:	7 bits data, 1 bit even parity (even)
7-odd:	7 bits data, 1 bit odd parity (odd)
8-even:	8 bits data, 1 bit even parity (even)
8-odd:	8 bits data, 1 bit odd parity (odd)

3.5.7 DELAY (dEL)

It is the delay time from the request to the data transmission. If configured in STREAM mode, it is the delay time between the transmitted data.

These are the options:

OFF, 100ms, 250ms, 500ms, 1s, 2s

3.5.8 TERMINATION (tEr)

Termination of the data blocks.

These are the options:

CR+LF	<CR>,<LF>
CR	<CR>
ET	<ETX>

ET+CR	<ETX><CR>
NONE	NOTHING

3.5.9 PROT (Prot)

Communications protocol selection (see 2.11). If “**RS-232**” is selected, the Add parameter is forced to be “0”.

3.5.10 ADD (Add)

Address of the equipment in a RS-485 network. It has to be “0” to operate as a RS-232 port.

3.6 Analog Output

(Accessible menu only after having installed the Analog Output accessory)
Analog output menu gives access to the parameters showed in Figure 3.6.1.

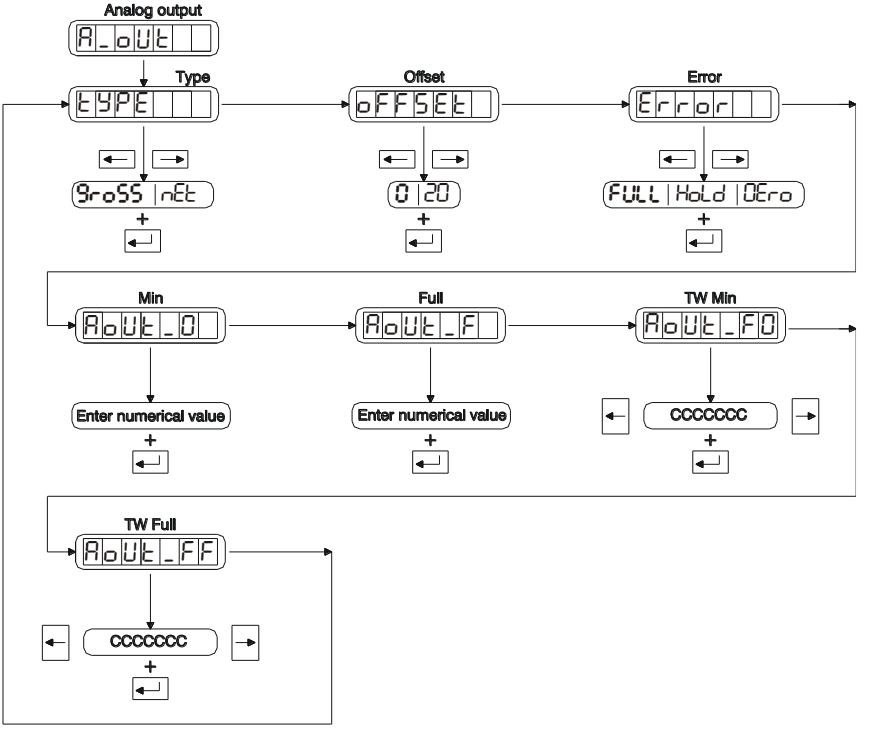

Figure 3.6.1 Analog Output

3.6.1 TYPE(tYPE)

Weight value of analog output signal.

These are the options:

GROSS:	Gross weight value is taken as reference
NET:	Net weight value is taken as reference

3.6.2 OFFSET (oFFSEt)

Analog output zero offset.
These are the options:
0% y 20%.
Note: For a 4-20mA or 2-10V output we should set the oFFSEt value at 20%.

3.6.3 ERROR (Error)

Output in case of system error.
These are the options:

FULL:	Output = MAX
HOLD:	Hold the output to the current value
ZERO:	Output = MIN

3.6.4 MIN (AoUt_0)

Minimum capacity of the analog output range.

3.6.5 FULL (AoUt_F)

Maximum capacity of the analog output range.

3.6.6 TW MIN (AoUt_F0)

Fine adjustment of the minimum analog output. Modify the level pressing the arrow keys.

3.6.7 TW FULL (AoUt_FF)

Fine adjustment of the maximum analog output. Modify the level pressing the arrow keys.

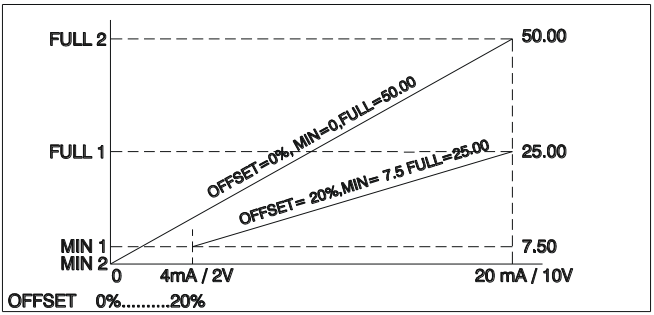

Figure 3.6.7.1 Typical Analog Output Scaling

3.7 *Digital outputs*

(Accessible menu only after having installed the Digital Outputs accessory)

Within the digital outputs configuration level, parameters showed in Figure 3.7.1 can be found.

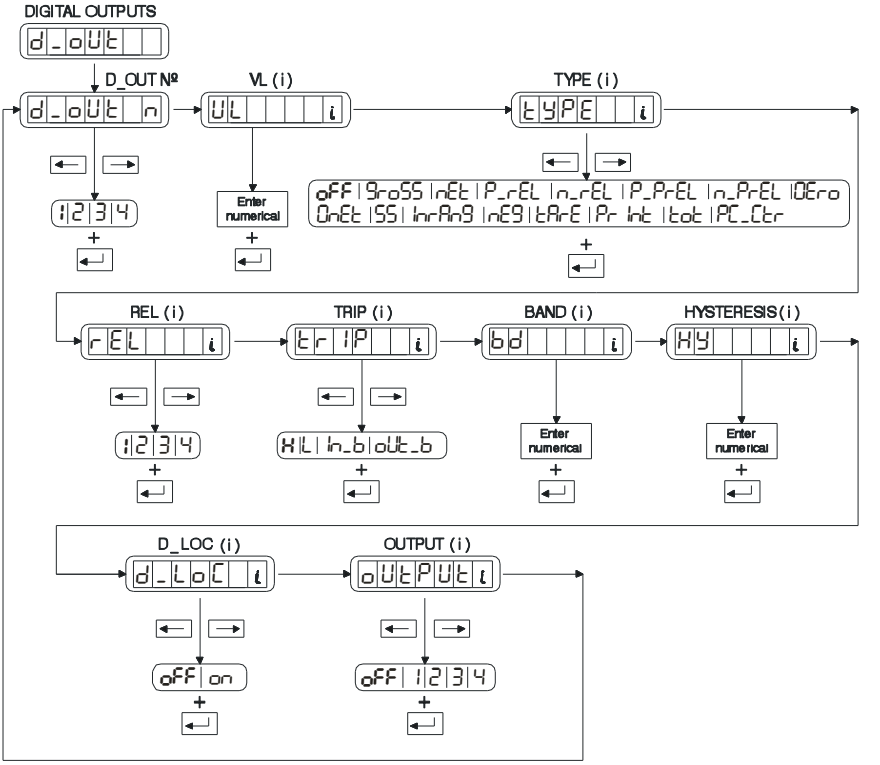

Figure 3.7.1 Digital outputs

3.7.1 D_OUT Nº (d_out n)

Select the number of output.

These are the options:

1, 2, 3, 4

3.7.2 VL(i) (UL)

Value with which the selected output operates.

3.7.3 TYPE(i) (tYPE)

Type of output action.
These are the options:

OFF (oFF):	Deactivated
GROSS (GroSS):	Gross weight value as reference
NET (nEt):	Net weight value as reference
+REL (P_rEL):	Setpoint trips on the absolute setpoint value, VL(i), plus the relative value, REL(i)
-REL (n_rEL):	Setpoint trips on the absolute setpoint value, VL(i), minus the relative value, REL(i)
+%REL (P_PrEL):	Similar to +REL/-REL except the setpoint trips on the absolute setpoint value plus a percentage of the relative value
-%REL (n_PrEL):	Similar to +REL/-REL except the setpoint trips on the absolute setpoint value minus a percentage of the relative value
ZERO (0Ero):	The output trips if a zero is in the system
ZERONET (0nEt):	The output trips if the net mode is activated and the display shows a zero
SS (SS):	The output trips if the scale is in the Standstill state
INRANGE (InrAnG):	The output trips if the weight value is within ±MAX
NEG (nEG):	The output trips if the weight value is under zero
TARE IN (tArE):	The output trips if a tare is in the system
PRINT (Pr Int):	The output trips while printing
SUM (tot):	The output trips if there is a sum
PC_Ctr (PC_Ctr):	Output controlled by the serial port

3.7.4 REL(i) (rEL)

It defines the reference SETPOINT number on which ±REL or ±%REL are applied. It should be considered that the output number that we are defining must be higher than the reference number. If this condition is not fulfilled, the error message “rEL_Err” will appear on the auxiliary display.

These are the options:

1, 2, 3, 4

3.7.5 TRIP(i) (tr IP)

Setpoint trip action.
These are the options:

H:	Trip when weight<VL(i)
L:	Trip when weight >VL(i)
In_b:	Trip hen weight>VL(i)+BD(i) or weight<VL(i)-BD(i)
oUt_b	Trip when VL(i)-BD(i)<weight<VL(i)+BD(i)

If the digital output is set in the PC_Ctr mode of the tYPE(i) parameter (see 3.7.3), when you turn on the equipment the output configuration is determined by this operation mode.

HIGH:	ON
LOW:	OFF

3.7.6 BAND(i) (bd)

A numerical value which determines the value of the IN_B and OUT_B selections of the TRIP parameter.

3.7.7 HYSTERESIS(i) (HY)

Determines the hysteresis value which prevents chattering of the digital output

3.7.8 LOCKED (d_LoC)

It blocks the modification of VL(i) value through the keyboard (see 2.9)

3.7.9 OUTPUT(i) (oUtPUt)

Associates a physical digital output with a setpoint (see 5.6). If you try to assign more than one setpoint to a digital output, the message "oUt_Err" is displayed.

These are the options:

oFF, 1, 2, 3, 4

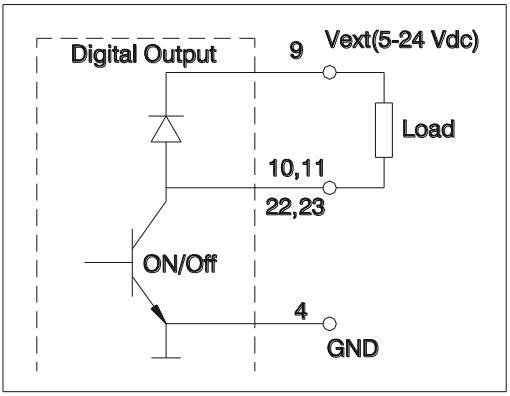

Figure 3.7.9.1 Digital Output Equivalent Circuit

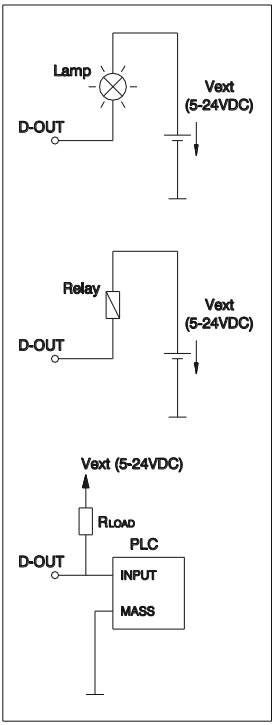

Figure 3.7.9.2 Examples of Application

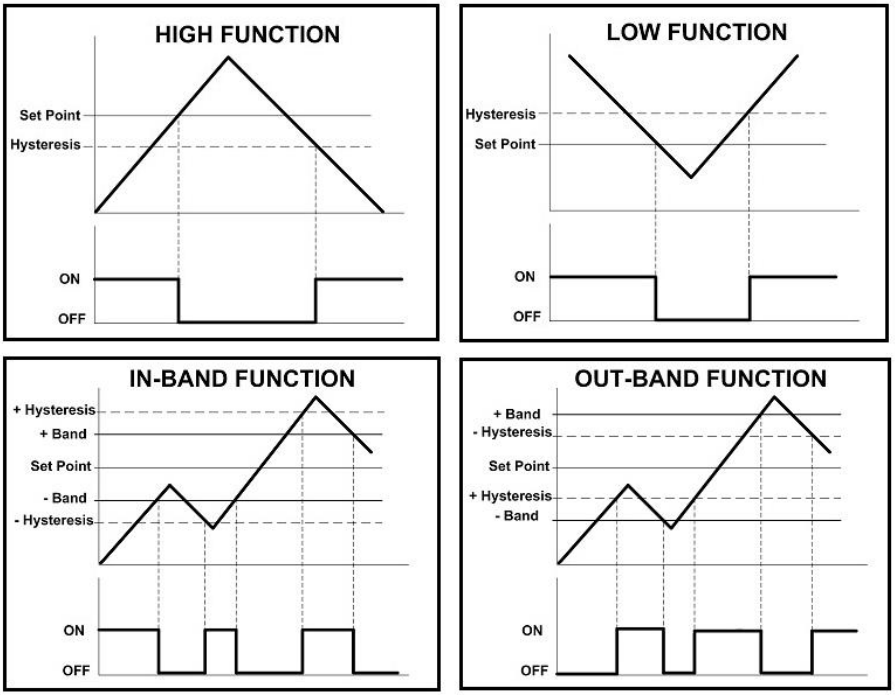

Figure 3.7.9.3 Setpoint TRIP Actions

3.8 Digital Inputs

(Accessible menu only after having installed the Digital Inputs accessory)

Within the digital inputs configuration level, parameters showed in Figure 3.8.1 can be found.

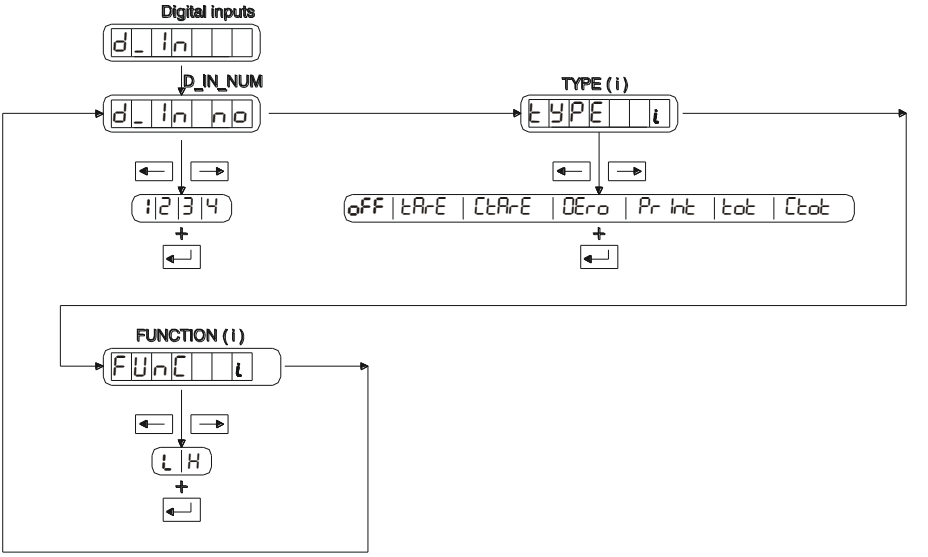

Figure 3.8.1 Digital Inputs

3.8.1 D_IN NUM (d_ In no)

Number of digital input.

These are the options:

1, 2, 3, 4

3.8.2 TYPE(i) (tYPE)

Input action.

These are the options:

OFF (oFF):	Deactivated
TARE (tArE):	Tare
CLRTARE (CtArE):	Deactivate tare
ZERO (OZro):	Zero
PRINT (Pr Int):	Print
SUM (tot):	Accumulation
CLRSUM (Ctot):	Deactivate accumulation

3.8.3 FUNCTION(i) (FUnC)

Input action mode.
These are the options:

LOW: From HIGH to LOW (Falling edge)
HIGH: From LOW to HIGH (Rising edge)

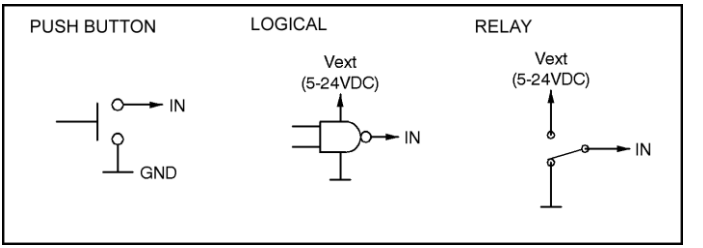

Figure 3.8.3.1 Examples of Application

3.9 Calibration with Masses

Within the calibration with masses level, parameters showed in Figure 3.9.1 can be found.

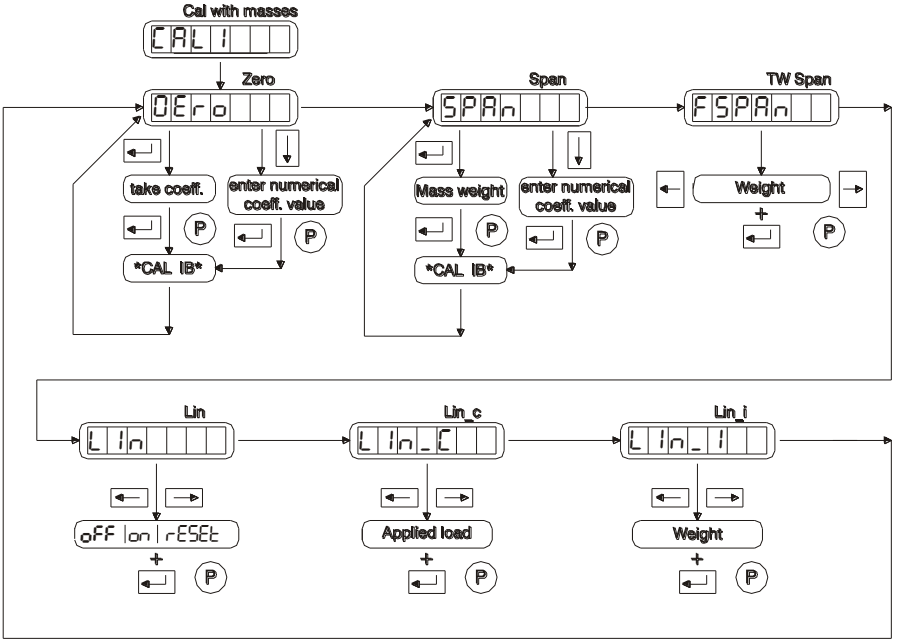

Figure 3.9.1 Calibration with Masses

3.9.1 ZERO (0Ero)

- Automatic zero adjustment: To automatically adjust the zero value make sure there is not any weight on it and press the enter key. The indicator will show the present coefficient value. On pressing enter again the message *CALIB* will be shown while the indicator assesses the present value. Once accepted it will be stored. It is recommended to keep this coefficient value or print it by means of printing the parameters.

- Manual zero adjustment: to manually introduce the zero value the Arrow Down key (▼) has to be pressed. Then we select the corresponding digit with the Arrow Left and Arrow Right keys (◀ ▶). The selected digit value is modified with Arrow Up and Arrow Down keys (▲▼). If a negative value has to be introduced it can only be done with the first left digit. The negative sign appears after the number 9.

When we want to manually introduce the zero value in an indicator with a software version previous to 1.3XX then the last digit has to be truncated.

3.9.2 SPAN (SPAn)

- Automatic span adjustment: To automatically adjust the span, place a certified test weight on the scale and press Enter. The maximum scale value is displayed, if the weight placed on the scale is different, key in the real value. Press the Enter key and *CALIB* is displayed while the unit calculates the span coefficient. After accepting it, it is stored.

- Manual span adjustment: to manually introduce the span value the Arrow Down key (▼) has to be pressed. Then we select the corresponding digit with the Arrow Left and Arrow Right keys (◀▶). The selected digit value is modified with Arrow Up and Arrow Down keys (▲▼). If a negative value has to be introduced it can only be done with the first left digit. The negative sign appears after the number 9.

When we want to manually introduce the span value in an indicator with a software version previous to 1.3XX then the last two digits have to be truncated.

3.9.3 TW SPAN (FSPAn)

Span fine adjustment. Use the right/left arrow keys to adjust this value. Press Enter to store the value.

3.9.4 LIN, LIN_C y LIN_I (L In,L In_C,L In_ I)

To activate the linearity adjustment function.
These are the options:

OFF: Linearity adjustment deactivated
ON: Linearity adjustment activated
RESET: Linearity adjustment deactivated and linearity adjustment parameters cleaning

In On position, you access parameters LIN POINT, LIN COR.

LIN_C: Applied load (known value of the mass chosen for the correction)
LIN_I: Indication of the applied load

These parameters allow the correction of a possible non linearity in the system.
This adjustment is performed in the point you choose from 0 to MAX.

After adjusting the scale (zero and span), if a linearity error is detected due to a discrepancy between the load and the system indication, choose a point where discrepancy is more significant and then adjust linearity.

The linearity error disappears at that point and is fundamentally reduced in the rest of points (see figure 3.9.4.1).

ATTENTION
The value of zero and span coefficients is obtained by means of the impression of the parameters (see 3.13.3)

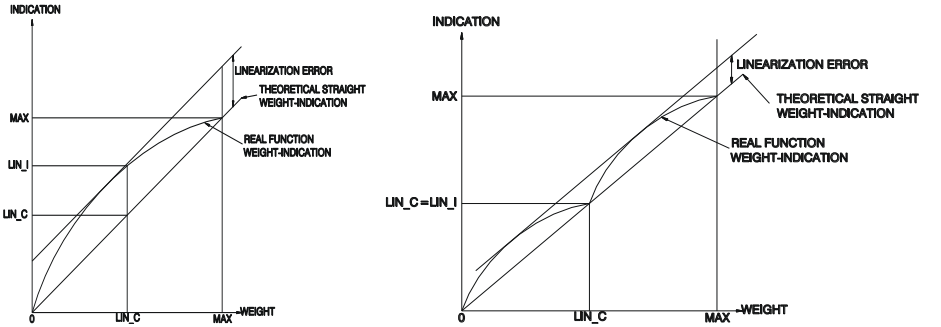

Figure 3.9.4.1 Linearity adjustment performance before and afterwards, respectively.

This is the procedure:

1-Select Reset in the LIN parameter in order to assess the system linearity without any pre-existing correction. The LIN parameter is deactivated and any previous correction is deleted.

2-Place a known load in a point of the range where there is a significant linearity error. Note down the indication value.

3-Select ON in the LIN parameter and then you gain access to LIN_C and LIN_I parameters.

4-Key in the load value in the LIN_C parameter and press Enter to confirm.

5-Key in the indication value in the LIN_I parameter and press Enter to confirm.

6-The correction has been made.

7-This procedure can be repeated without clearing the previous correction (continue from point 2).

This adjustment calculates an internal algorithm which will be applied whenever the LIN parameter is ON, even if the indicator is redefined or recalibrated. That is why it is important to deactivate it or delete it if its application is not important anymore.

However, whenever a span adjustment is made (SPAN parameter), in the moment of validating the calculated coefficient a message notifies us that the LIN parameter is activated, where appropriate.

3.10 Numerical Calibration

If there is no reference weight value, it is possible to make a theoretical calibration using capacity and sensibility values (mV/V) of the load cells used.

For a calibration of maximum precision you always have to use the calibration with masses.

Within the numerical calibration level, parameters showed in Figure 3.10.1 can be found.

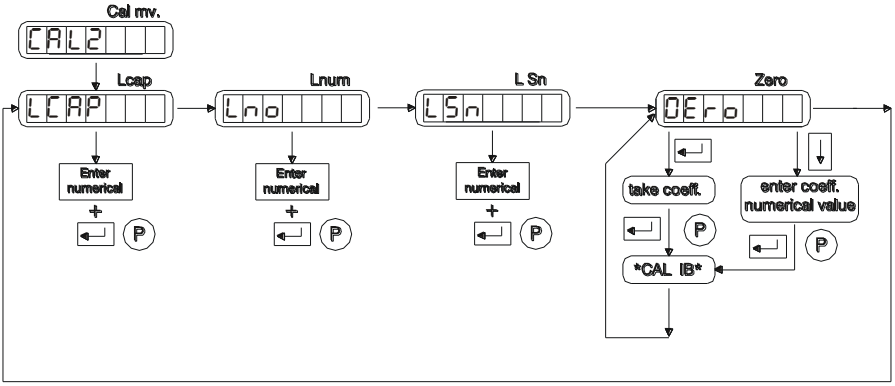

Figure 3.10.1 Numerical Calibration

3.10.1 LCAP (LCAP)

Nominal capacity (Emax) of one of the load cells from the scale. It is expressed in the same decimal point used in MAX and DIV (see scale definition 3.2.3, 3.2.4 y 3.2.5).

3.10.2 LNUM (Lno)

Number of load receiver supports. All supports must be counted, both those which rest on load cells and those which do not.

3.10.3 L Sn (LSn)

Load cells nominal sensibility in mV/V (if values are not the same, calculate the average).

3.10.4 ZERO (0Ero)

- Automatic zero adjustment: To automatically adjust the zero value make sure there is not any weight on it and press the enter key. The indicator will show the present coefficient value. On pressing enter again the message *CALIB* will be shown while the indicator assesses the present value. Once accepted it will be stored. It is recommended to keep this coefficient value or print it by means of printing the parameters.

- Manual zero adjustment: to manually introduce the zero value the Arrow Down key (▼) has to be pressed. Then we select the corresponding digit with the Arrow Left and Arrow Right keys (◀▶). The selected digit value is modified with Arrow Up and Arrow Down keys

(▲▼). If a negative value has to be introduced it can only be done with the first left digit. The negative sign appears after the number 9.

When we want to manually introduce the zero value in an indicator with a software version previous to 1.3XX then the last digit has to be truncated.

ATTENTION
The value of zero and span coefficients is obtained by means of the impression of the parameters (see 3.13.3)

3.11 Animal-weigher/Check-weigher application

Within the animal-weigher/check-weigher application level, parameters showed in Figure 3.11.1 can be found:

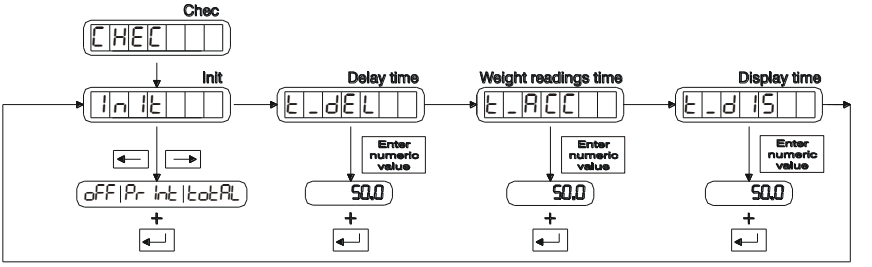

Figure 3.11.1 – Animal-weigher/Check-weigher application

3.11.1 Init (In It)

Through this option we can activate or deactivate the Animal-weigher/Check-weigher option. It can be activated in Pr Int mode or in totAL mode and be deactivated with oFF.

If it is activated in Pr Int mode, the process is started on pressing the key (or equivalent RS-232 or digital input command) and the indicator prints a ticket on ending. If the totAL mode is chosen, the process is started on pressing the key (or equivalent RS-232 or digital input command) and totalized on ending.

3.11.2 Delay time (t_dEL)

It is the time the indicator will be waiting without weight readings once the process activation signal is given (by keyboard, RS-232 command or digital input).

During this time the indicator displays the message --dEL--. Its value is configurable from 0.0 to 50.0 seconds. If the entered value is above 50.0 seconds the indicator will display the error message Err_toP and then will show the previous memorized value.

3.11.3 Weight readings time (t_ACC)

It is the time the indicator will be gathering weight readings of the weight on the scale.

During this time the indicator displays the message --ACC-- . Once the gathering process is ended the indicator makes an average of all the weight readings obtained during this time and displays it A 2.150 , with an "A" on the left to indicate that the weight displayed is an average of the weight readings gathering.

Its value is configurable from 0.0 to 50.0 seconds. If the entered value is above 50.0 seconds the indicator will display the error message Err_toP and then will show the previous memorized value.

3.11.4 Display time (t_d 15)

It is the time the indicator will display the average of the weight readings gathering. Its value is configurable from 0.0 to 50.0 seconds. If the entered value is above 50.0 seconds the indicator will display the error message Err_toP and then will show the previous memorized value.

3.12 Alibi DSD Function (Data Storage Device)

The DSD menu will only appears if the optional DSD board is already installed. The DSD Identificator (DSD ID) is a correlative value designed automatically by the SMART. Is not possible to configure it or paramentrize it.
In the DSD menu, we'll find the following structure (see figure 3.12.3):

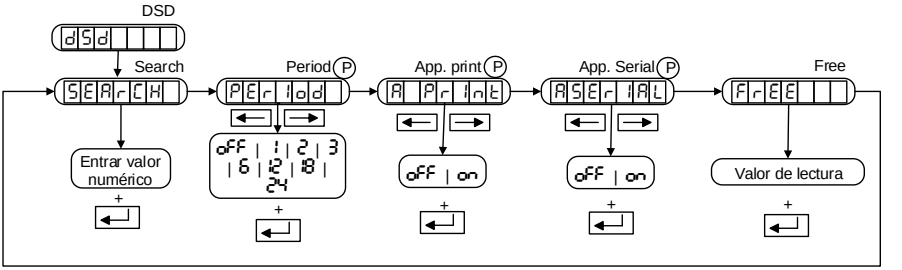

Figure 3.11.3 – DSD Function

The DSD option, is added trough an installation of the optional board Time + DSD or Multi 2 + DSD.
The DSD function will be applicable for Ticket and Comunications.
The DSD function will not be applicable to Piece Counting:

- If the device is in Piece Counting configuration, the ticket will be print without DSD ID, and the value will not be stored in the DSD memory.
- If a Piece Counting is activated, and through a serial port arrives an order to weight with DSD, the device will use weight instead of pieces.

The máximum amount of DSD registers is: 524.288 registers.

3.12.1 DSD hardware installation

The installation of the "DSD board" will be done in the same way as any other SMART optional board. This functionality is only available in the TIME DSD and MULTI2 DSD boards.
Is also needed to have the 1.510 software version of higher, to use the DSD functionalities.

3.12.2 Layout of the fields in the ticket

When the Alibi DSD function is activated, will appears a new line on the ticket, where an DSD ID will be placed:

In a standard ticket, the layout will be the following:

```
DSD ID:          173

Ticket n°         43

Date          Time
10/11/17      12:27

Gross        18.5 kg
Tare          0.0 kg
Net          18.5 kg
```

In Preset Tickets should be added the field to print the DSD value. The label to use is:

- Label for Alibi DSD Identifier in a preset ticket: **{DSDI}**

If the DSD board doesn't exist in the Smart, on the preset ticket will appears: `XXXXXX as a variable`.

3.12.3 DSD Parameters

3.12.3.1 Search a stored register (SEAr-CH)

To consult a register of the Alibi DSD memory enter the ID and validate with ENTER. When entering the menu, the last generated ID appears.
In case of an error in the reading / search of the registry, the following errors will appear:

- "Err 63": Register not found. The ID entered is not in the DSD memory.
- "Err 64": Corrupt DSD register. The ID has been found but the information is corrupted.
- "Err 65": Failure in DSD board. Hardware error.
- "Err 66": Indeterminate error reading DSD register.

After validating the ID, in case this ID is in memory the following information will appear:

Weighing information	Example:
Units	U. kg
Date	d.14.01.18
Hour	t. 07:55
Gross	GroSS/ 2450 (1)
Tare	tArE/ 0 (1)
Net	nEt/ 2450 (1)

In the display of the information of the gross, tare and net weights, the text of the weight shown (gross, tare or net) will appear first and then the weight will be displayed.

3.12.3.2 Minimum time to store registers (PEr lod)

Minimum time (in months) during which the registers are stored in the memory of the device. If during the established period, the storage limit value is reached, the device will display the message:

- Err 67: DSD memory full. Until the selected period of time has elapsed before a register can be deleted, another operation will not be allowed to be recorded.

Possible configuration values available: **OFF**, 1, 2, 3, 6, 12, 18, 24 (OFF = the date is not checked before deleting the oldest record).

3.12.3.3 Alibi DSD function in ticket (A. Pr Int)

To save the dates in the DSD memory,In order for the data of a ticket to be saved in DSD, this function must be activated in the SETUP of the equipment. To do this you must set the option SETUP \ DSD \ A.PRINT to ON. This option only affects to the standard and programmed ticket (gross, tare, net).

- It does not affect the totalization ticket since operations in the DSD memory are not saved in this one.
- This option is also not available in the ticket in function Piece Counting.If we have activated the option to save in DSD the ticket will only be printed if the weighing data could previously be saved in the DSD memory. If they can not be saved, an error will appear on the screen and the ticket will not be printed.

The possible errors are:

- "Err 65": Failure of the DSD board. Hardware error. Contact to technical service.
- "Err 67": DSD memory full. Until the selected period of time has elapsed before a register can be deleted, another operation will not be allowed to be recorded.
- "Err 68": Fault in the clock: the clock does not work or it is not configured.

3.12.3.4 Alibi DSD function by serial port command(A.SEr IAL)

When a weight request with DSD is requested, the device first checks that the weight meets the conditions to be sent, then stores it in the DSD memory and then sends the weight through the communication port along with the ID generated by the DSD device.

Conditions that the weight must meet to be sent in a request with DSD:

- Weight stability
- No error of the ADC.
- There is no OVERLOAD or UNDERLOAD
- DSD of the equipment is activated for communications.
- DSD memory is not full
- Access to the DSD without any error

If all these conditions are not met, the equipment does not save the weight in the DSD and returns an error code.

Command weight request with Alibi DSD serial port:

- PDSD <CR> : saves the weight in the DSD memory and sends back the information saved on DSD.

Format of the answer of the device in case of error:

DSD-ERROR *n*	Term.

Length 11 characters + termination):

Where *n* is the error code, with the following values:

1	DSD deactivated.
2	DSD memory full
3	Writing error in DSD
5	errors in ADC
6	Unstable weight
7	Underload
8	Overload
9	Clock doesn’t work or not configured

Format of the answer of the device in case of correct operation:

<STX>	DSD-ID	Date/Hour	Scale	Gross	SP	Tare	Term.

Lenght: 41 characters + termination

<STX> … START OF TEXT (ASCII 2)
DSD-ID … identifier, 6 charaters ASCII, values 1 – 999999
Date/Hour … date/hour of the wheighing, format DDMMYYhhmm
DD – day, MM – month, YY – year, hh – hour, mm – minutes, 10 characters
Scale … Fix character. Value: character '1' (ASCII code 49).
Gross … gross weight with units, 11 characters

- Format of the gross weight:

Sign	Gross weight - 8 digits	units	space

SP… Fix character. Character space (ASCII code 32).
Tare… peso tara con indicación de unidad y si es tara manual, 11 caracteres

- Format of tare:

Sign	Tare wheight - 8 digits	units	P

- Sign: negative weight – ; positive weight +
- units: K – kg, L – pounds, T – tones, G – grams, O – ounces, Space to the rest of units
- P: for manual tares, or space for tares got from the scale
- Term.: Termination of the date block, as programmed in the serial port configuration (CR, CR+LF,…)

3.12.3.5 Free Alibi DSD memory space (FrEE)

Indicates the percentage of free DSD memory.
Is a read-only value.
When the value is checked with the key , the CALC message Will appear while the device calvulates the percentage of free memory. After this, the free memory percentage value will appear:

- 100 totally empty DSD memory
- 25 memory DSD with 25% free
- 0 memory completely full, it is not possible to add more registers

3.13 Tools

Within the tools level, parameters showed in Figure 3.13.1 can be found.

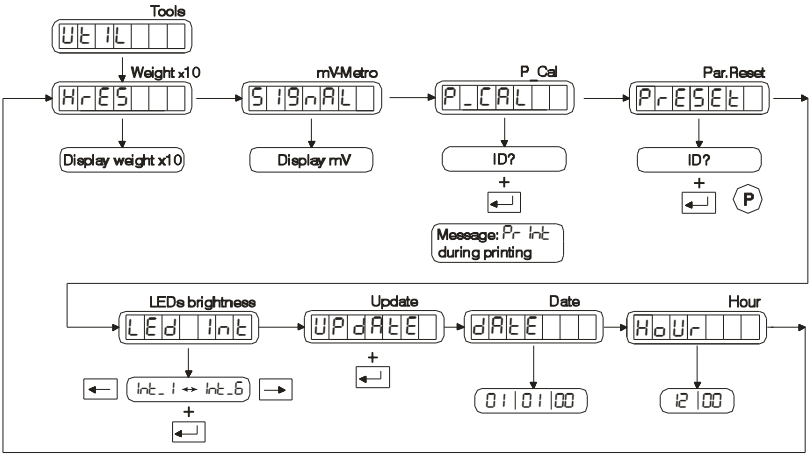

Figure 3.13.1 Tools

3.13.1 Weightx10 (H_rES)

Displays the weight with a resolution multiplied by ten.

3.13.2 MV-Metro (SIGnAL)

Displays the ADC output in mV.

3.13.3 Print Cal (P_CAL)

Prints the equipment parameters.

NOTE: Prints the configuration device via SERIAL 1 or SERIAL 2 ports, if they are configured as MODE(tYPE) →TICKET (t i). If both communication ports are configured as TICKET (t i) the printing will be done by SERIAL 2 port.

Also we can send the parameters printing to an hyperterminal, for that, we need to connect the communicaction cable to a PC and configure the same baud rate in both devices, (PC and Smart)

The following is an example of printing parameters as is done by the device:

3.13.4 SMART Parameter List

SNR 846358
SW VER S 1.425n
NUM.CAL 107
D.CAL 29/02/12
29/02/12 13:06
PIN 2802

DEF
CAP 1500.0
DI 0.5
UNIT kg
0-TRAC 0.5d
0-TOP 1.9
0-START OFF
0-NEG OFF

OPTIONS
FILTER 8
BAND 1d
LANG SPA
Prt_min 5
PRT_TI EST
TOT_TI EST
T.ID 350
KEYBLK OFF
PRNLK OFF
TARELK OFF
ZEROLK OFF
PCSLK OFF
TOTLK OFF

SERIAL
TYPE DE
BAND 0.0
FOR F1
BAUD 9600
PAR 8N
DEL 250
TER CRLF
Ctrl OFF
PORT RS-232
ADD 0

PRINTER
TYPE TI
BAND 0.0
FOR F1

BAUD 9600
PAR 8N
DEL 250
TER CRLF
Ctrl OFF

A_OUT
TYPE GROSS
OFFSET 20
ERROR FULL
AOUT_0 0.0
AOUT_F 100.0

D_OUT

D_OUT No 1
UL 5.0
TYPE NET
REL 1
TRIP H
BD 0.0
HY 1.0
LOCKED OFF
OUTPUT 1

D_OUT No 2
UL 1.0
TYPE N_REL
REL 1
TRIP H
BD 0.0
HY 0.3
LOCKED OFF
OUTPUT 2

D_OUT No 3
UL 100.0
TYPE OFF
REL 3
TRIP H
BD 0.0
HY 0.0
LOCKED OFF
OUTPUT 3

D_OUT No 4
UL 200.0
TYPE OFF
REL 4
TRIP L
BD 0.0
HY 0.0
LOCKED OFF
OUTPUT 4

D_IN

D_IN No 1
TYPE TARE
FUNC L

D_IN No 2
TYPE CTARE
FUNC H

D_IN No 3
TYPE PRINT
FUNC L

D_IN No 4
TYPE 0ERO
FUNC H

CALIBRATION
ZERO 16133
SPAN 104662
LN OFF

3.13.5 Par.Reset (PrESEt)

Resets all the parameters to the default configuration.

3.13.6 Brightness of LEDs (LEd Int)

The brightness of LEDs may be changed with this tool. The range goes from 1 (minimum value) to 6 (maximum value). The selected brightness is displayed as it is modified.

3.13.7 SW UPDATE (UPdAtE)

Allows to upgrade the software via PC program (SMART Bootloader). You must have the calibration switch open and enter the PIN correctly so that the equipment is ready to communicate with the PC. Updating the software increase the number of calibrations on the indicator.

3.13.8 Date(dAtE)

(Accessible only after having installed the Clock accessory)
Current date.

3.13.9 Hour(HoUr)

(Accessible only after having installed the Clock accessory)
Current hour.

4 Installation

4.1 Measures

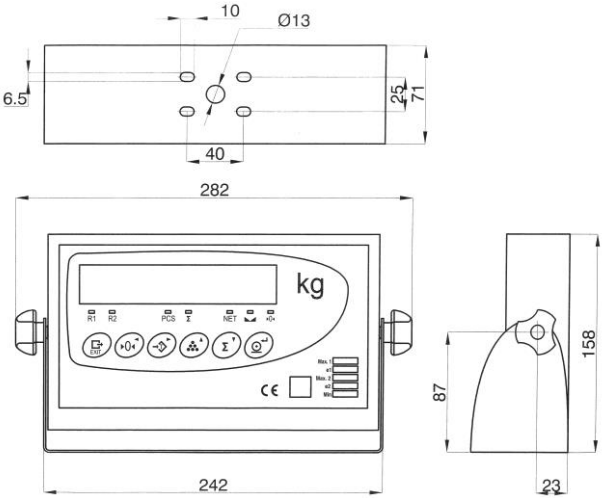

Figure 4.1.1 Measures stainless steel version

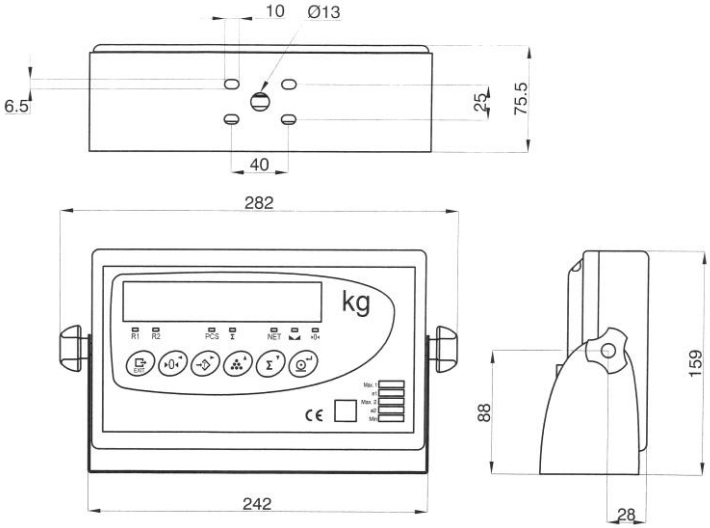

Figure 4.1.2 Measures ABS version

4.2 Fixed Bracket

Bascule bracket for wall, ceiling, structure, etc. mounting.

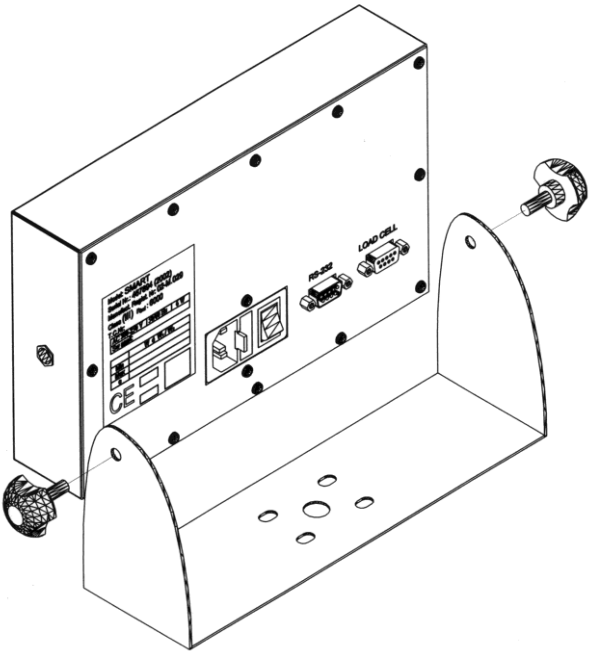

Figure 4.2.1 Fixed Bracket Mounting

4.3 Unit Label

Next to the main display, the default units (kg) are silkscreen printed. Adhesives with different units are included.

Units: g, t, lb, oz, ton, N, kN and an empty label.

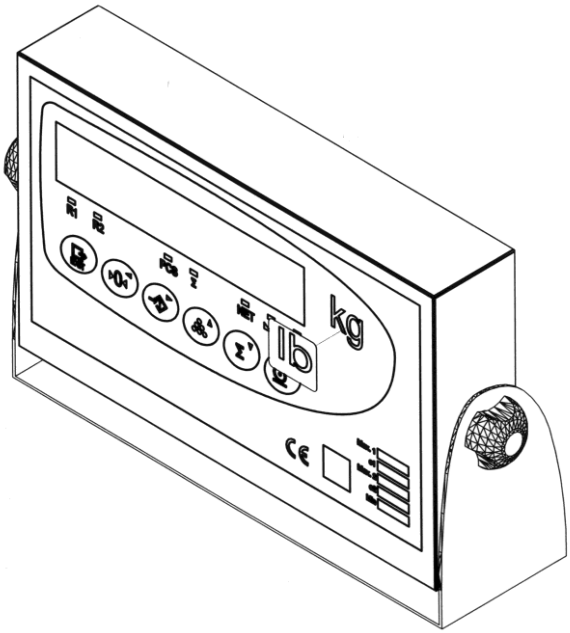

Figure 4.3.1 Unit Label

4.4 IP65 Assembly

(Only available in the stainless steel version)

To make the appropiate connections in the IP65 indicator (see 5.3), remove the rear cover and pass each connection cord through the designated cable-gland screwing each of them to guarantee that they are properly locked. If any of the connections is not established, do not drill the cable-gland inside part.

After passing each cable through the cable-gland, pass them twice through the inside part of the circular ferrites supplied with the equipment.

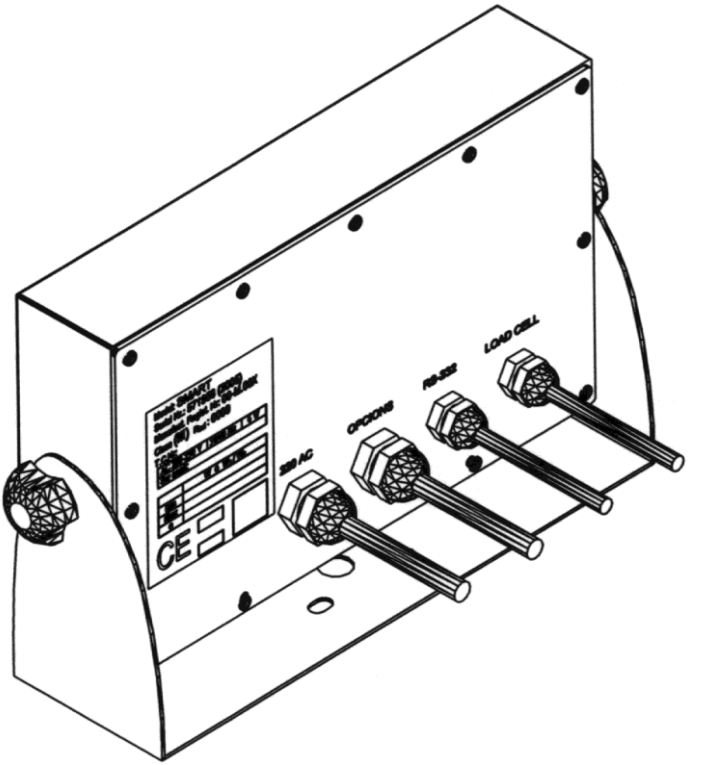

Figure 4.4.1 IP 65

5 Connector Description

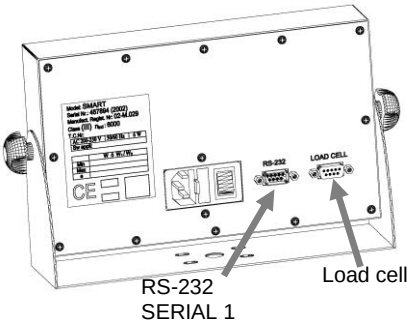

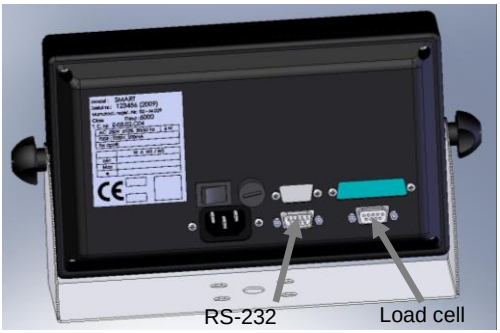

Figure 5.1 Connectors

5.1 Load cell Connector

Use a SUBD-9 aerial male connector to connect the load cell to the indicator. Weld wires in accordance with the following tables. For the 6 wire connection it is advisable to bridge 1-6 and 5-9 pins in order to double the excitation signal contact surface.

	PIN	SIGNAL	UTILCELL Cell Code
SUB-D 9 aerial male connector 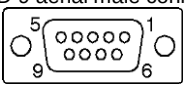 Pin allocation welding's side view	1	EXC +	Green
	6		
	2	Sense +	Blue
	7	SIG +	Red
	3	Shield	-
	8	SIG-	White
	4	Sense -	Yellow
	5	EXC -	Black
	9		

Table 5.1.1 6 Wire PIN Allocation

If a 4 wire cable is used, bridge 1-6-2 pins (EXC+ and SENSE+) and 4-5-9 (EXC- and SENSE-) in the aerial connector.

	PIN	SIGNAL	UTILCELL Cell Code
SUB-D 9 aerial male connector 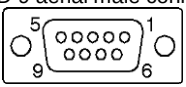 Pin allocation welding's side view	1	EXC +	Green
	6		
	2		
	7	SIG +	Red
	3	Shield	-
	8	SIG-	White
	4	EXC -	Black
	5		
	9		

Table 5.1.2 4 Wire PIN Allocation

5.1.1 Load cell connector sealing

The sealing of the load cell connector is made by means of a autodestruible sticky label as showed in figure 5.1.1.1.

Figure 5.1.1.1 Load cell connector sealing

5.2 Communication Connectors

5.2.1 RS-232 SERIAL 1 Connector

The indicator connector is a male SUB-D 9.

	PIN	SIGNAL
SUB-D 9 aerial female connector 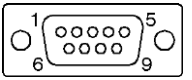 Pin allocation welding's side view	1	-
	2	RxD
	3	TxD
	4	-
	5	GND
	7	RTS (Only available with Multioption board)

Table 5.2.1.1 RS-232 SERIAL 1 Connector Allocation

5.3 IP65 Connections

Use the cable-gland that you will find in the equipment rear side for the IP65 indicator connections. Make the connections as shown in figure 5.3.1.

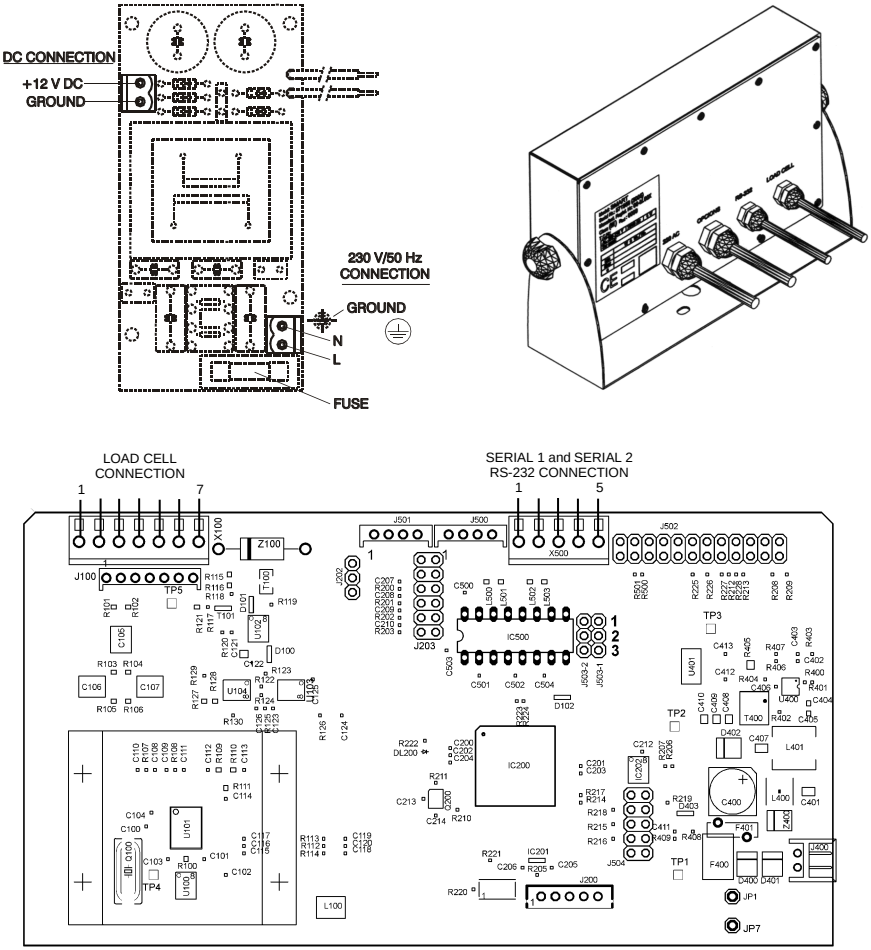

Figure 5.3.1 IP 65 Connection

WARNING-SHOCK HAZARD
Due to the risk of electrical shock, this instrument must be operated only by qualified personnel and be unplugged from the power supply.

WARNING-SHOCK HAZARD
Due to the risk of electrical shock, the cabinet of the equipment must be connected to the ground wire.

If a 4 wire power cord is used, bridge 4-7 pins (EXC+ and SENSE+) and 5-6 (EXC- and SENSE-) in the aerial connector.

Load cell Connection (6 wire)			Load cell Connection (4 wire)		
PIN	SIGNAL	UTILCELL Load cell Code	PIN	SIGNAL	UTILCELL Load cell Code
1	SIG +	Red	1	SIG +	Red
2	SIG-	White	2	SIG-	White
3	Shield	-	3	Shield	-
4	Sense +	Blue	5-6	EXC -	Black
5	Sense -	Yellow	4-7	EXC +	Green
6	EXC -	Black			
7	EXC +	Green			

Table 5.3.2 PIN Allocation

RS-232 SERIAL 1		RS-232 SERIAL 2	
PIN	SIGNAL	PIN	SIGNAL
1	TxD	3	GND
2	RxD	4	TxD
3	GND	5	RxD

Table 5.3.3 Serial PIN Allocation

5.4 Multioption connection

(Only available in the stainless steel version)

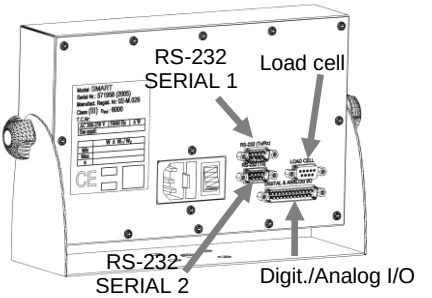

Figure 5.4.1 Multioption Connectors

5.5 RS-232 SERIAL 2 Connector

The indicator connector is a male SUB-D 9.

SUB-D 9 aerial female connector 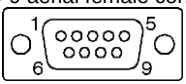 Pin allocation welding's side view	PIN	SIGNAL
	2	RxD
	3	TxD
	5	GND

Tabla 5.5.1 RS-232 SERIAL 2. Connector Allocation

5.6 Digital/Analog input/Output and RS-485 connector

The indicator connector is a male SUB-D 25.

SUB-D 25 aerial female connector 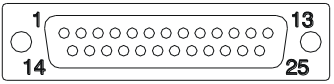 Pin allocation welding's side view	DIGITAL INPUT	
	PIN	SIGNAL
	5	IN1
	18	IN2
	6	IN3
	19	IN4
	4	GND
	DIGITAL OUTPUT	
	PIN	SIGNAL
	9	Vext
	10	D-OUT1
	22	D-OUT2
	11	D-OUT3
	23	D-OUT4
	4	GND
	ANALOG OUTPUT	
	PIN	SIGNAL
	2	V+
	3,15	V-
	1	I+
	14	I-
	RS-485	
	16	DATA +
	17	DATA -

Table 5.6.1 Digital/Analog Input/Output and RS-485 connector Allocation

5.7 IP65 Multioption connection

For the connections of the IP65 Multioption indicator as well as the connections of the IP65 (see 5.3) perform the connections shown in figure 5.7.1.

SERIAL 2 will be connected to X500 on the CPU board, and SERIAL 1 will be connected to the Multioption board. When installing the Multioption board, configure the jumpers on the CPU board as shown in section 5.9.

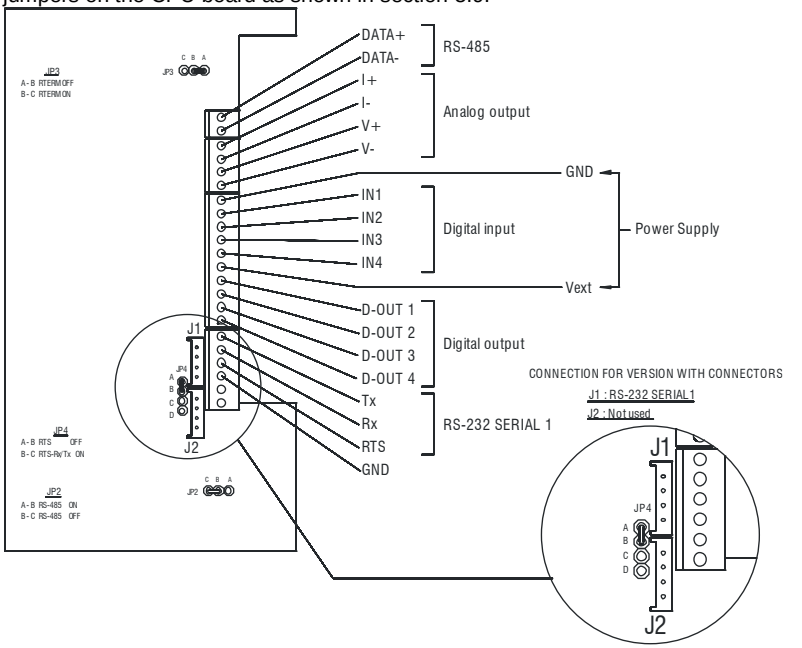

Figure 5.7.1 Multioption IP 65 Connection

5.8 RS-232/RS-485 change jumper for Multioption

To choose RS-232 or RS-485 output on SERIAL 1 port for Multioption board, jumper JP2 has to be placed as showed in figure 5.8.1.

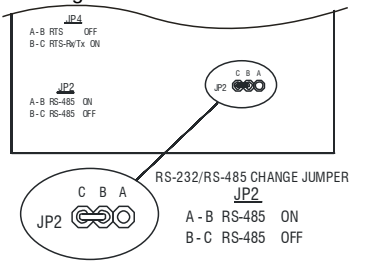

Figure 5.8.1 Position of jumpers for RS-232/RS-485

5.9 RS-232 Jumpers' position for Multioption

J503-1 and J503-2 jumpers should be allocated as descrived in figure 5.9.1

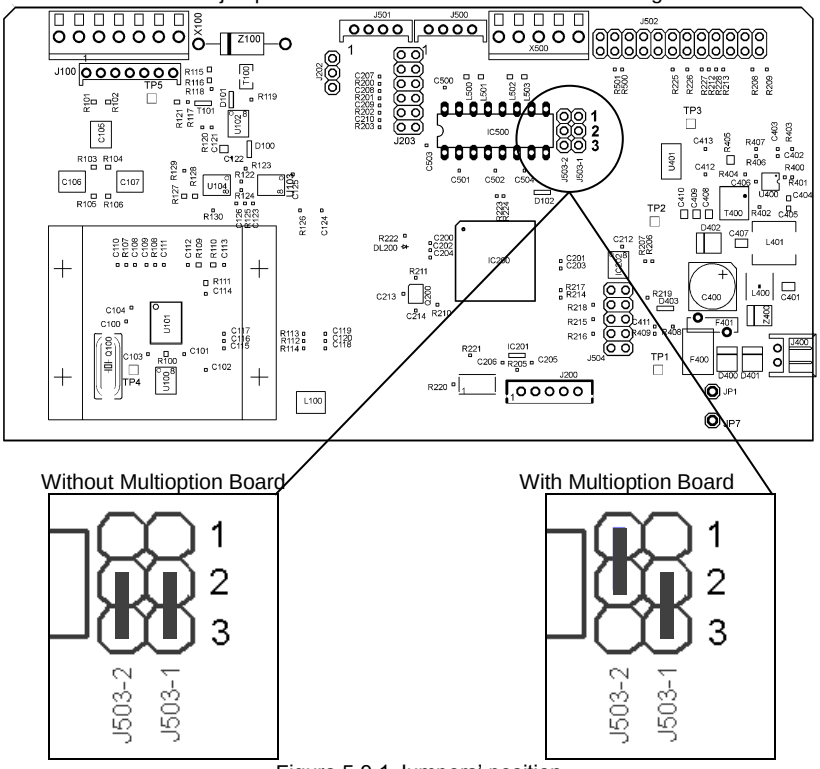

Figure 5.9.1 Jumpers' position

5.10 Remote Display Connection

The remote display connection to indicator is made using the RS-232 communication connectors connected as follows:

SUB-D 9 aerial female connector	INDICATOR		REMOTE DISPLAY	
	PIN	SIGNAL	PIN	SIGNAL
	3	TxD	2	RxD
Pin allocation welding's side view	5	GND	5	GND

Table 5.10.1 Indicator-Remote Display Connection Allocation

NOTES

NOTES

NOTES

SMART

WEIGHT INDICATOR

OPERATION AND CONFIGURATION MANUAL